Series M

TEXTRON POWER TRANSMISSION

CONTENTS

General Description 1

Unit Designations 2

Explanation and use of Ratings and Service Factors 3

Load Classification by Applications 4

Selection Procedure 5 - 6

Unit Versions - Column 9 Entry 7

Output Shaft Options - Column 11 Entry 8

Motor Adaptors - Column 12 Entry 9 - 13

Lubrication 14

Mounting Positions - Column 13 and 14 Entry 15

MOTORISED

Motor Performance Data and Standard Motor Variants Available 17 - 18

Brake Motors 19

Motor Details 20

Additional Motor Features - Column 19 Entry 21

Additional Gearbox Features - Column 20 Entry 22

Selection Tables - Geared Motors 23 - 80

Dimension Sheets - Geared Motors 81 - 90

Motorised Backstop Module 91

REDUCER

Overhung & Axial Loads on Shafts 93 - 94

Ratings - Input Power / Output Torque 95 - 106

Dimension Sheets - Speed Reducers 107 - 116

C-Face (B14) Mounting Dimensions 117

Thermal Power Ratings / Dimensions of Units with Fans 118 - 119

Reducer Backstop Module 120

Shipping Specification 121 - 126

GENERAL DESCRIPTION
EXAMPLES OF TYPES AND VERSIONS

0106

Series M inline geared motors and reducers provide a very efficient and compact drive solution to meet most requirements up to 90kW with maximum output torque capacity of 11000Nm.

Following in a long line of Textron products, the range takes advantage of many years of accumulated design expertise, together with the use of high quality materials and components. The end result is a series of speed reducing and geared motors offering high load carrying capacity, high efficiency, quiet running and reliability.

The Range Includes

Twelve sizes of unit with a ratio coverage of 1.2/1 to 8/1 in single reduction, 1.4/1 to 70/1 in double reduction and up to 250/1 in triple reduction and 16200/1 in combined units.

Unit Versions Available
- Base Mounted
- B5 (D) Flange Mounted
- Base and B5 (D) Flange Mounted
- B14 (C) Flange Mounting
- Base Mount and B14 (C) Flange Mounting

Unit type M - Motorised with IEC standard motor

Unit type N - Motorised with NEMA standard motor

Unit type H - Motorised with IEC high efficiency motor (EFF1 or EPACT)

Unit type E - Motorised with NEMA high efficiency motor (EPACT)

Unit type G - Unit to allow fitting of IEC motor (non Textron PT motor)

Unit type A - Unit to allow fitting of NEMA motor (non Textron PT motor)

Unit type R - Reducer unit

Unit type S - Reducer unit with fan kit

Unit type W - Reducer unit with backstop CCW rotation

Unit type X - Reducer unit with backstop CW rotation

Unit type Y - Reducer unit with fan and backstop CW rotation

Unit type Z - Reducer unit with fan and backstop CCW rotation

Design Features Include

Patented standard motor connection (IEC or NEMA).

Ability to fit double oil seal input and output as required.

All units being suitable to fit IEC or NEMA standard motors.

All units are dimensionally interchangeable with other major manufacturers.

Brake geared motors are available as standard.

Sizes 01, 02, 03, 04, 05, 06 and 07 are all supplied with lubricant.

Sizes 08, 09, 10, 13 and 14 are supplied without lubricant.

Motorised units can be fitted with a backstop module and reducer units can be fitted with a backstop and fan.

As improvements in design are being made continually this specification is not to be regarded as binding in detail and drawings and capacities are subject to alteration without notice. Certified drawings will be sent on request.

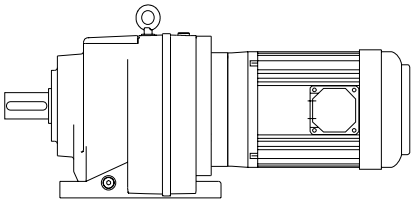

Two stage base mounted motorised

* M 0 3 2 2 8 . 0 B M C - 1 A . 7 5 A - -

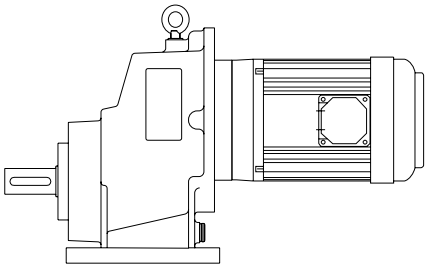

Single stage base mounted motorised

* M 0 5 1 2 5 . 0 B M C - 1 A . 7 5 A - -

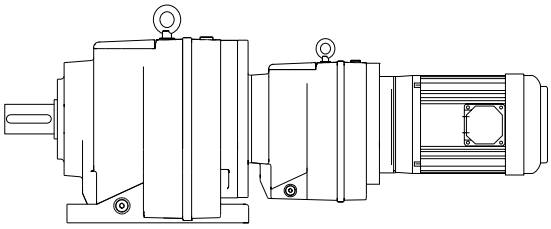

Four stage base mounted motorised

* M 0 6 4 2 2 5 0 B M C - 1 A . 1 8 A - -

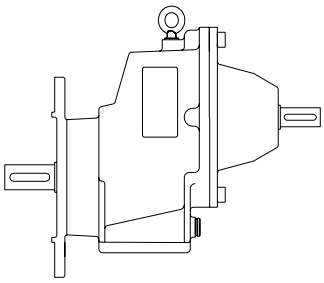

Single stage flange mounted reducer

* M 0 5 1 2 2 . 5 H R C - 1 - - - - - - -

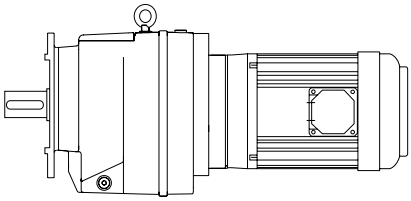

Three stage flange mounted motorised

* M 0 6 3 2 1 2 5 L M C - 1 A . 7 5 A - -

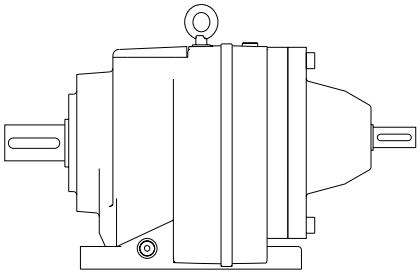

Two stage base mounted reducer

* M 0 7 2 2 7 1 . B R C - 1 - - - - - - -

* Typical unit designations

SERIES M
UNIT DESIGNATIONS

0106

	Gearbox Codes												Motor Codes							
	Series	Size of Unit		No of Reductions	Revision Version	Nominal Overall Ratio			Unit Version	Type of Unit	Output Shaft	Motor Adaptor	Mounting Position		Geared Motor Power			No of Motor Poles	Additional Motor Features	Additional Gearbox Features
	1	2	3	4	5	6	7	8	9	10	11	12	13	14	15	16	17	18	19	20
*	M																			
Example	M	0	3	2	2	8	.	0	B	M	C	-	1	A	.	7	5	A	-	-

* This Page May Be Photocopied Allowing The Customer To Enter Their Order

1 - Series M

Range [M]

2, 3 - Size of Unit

[0 1] Through [1 4]

4 - No of Reductions

[1] Through [5]

5 - Revision Version

[2] For Sizes 01 to 08

[1] For Sizes 09 to 14

6, 7, 8 - Nominal Overall Ratio

eg [8 . 0] See Pages 95 - 106

9 - Unit Version

[B] - Base Mounted

B5 (D) Flange Mounted

Base and B5 (D) Flange Mounted

Letter Entry Depends on Flange Diameter See Page 7

[E] - B14 (C) Flange Mounting

[V] - Base and B14 (C) Flange Mounting

10 - Type of Unit

[M] - Motorised with IEC standard motor

[N] - Motorised with NEMA standard motor

[H] - Motorised with IEC high efficiency motor (EFF1 or EPACT)

[E] - Motorised with NEMA high efficiency motor (EPACT)

[G] - Unit to allow fitting of IEC motor (non Textron PT motor)

[A] - Unit to allow fitting of NEMA motor (non Textron PT motor)

[R] - Reducer unit

[S] - Reducer unit with fan kit

[W] - Reducer unit with backstop CCW rotation

[X] - Reducer unit with backstop CW rotation

[Y] - Reducer unit with fan and backstop CW rotation

[Z] - Reducer unit with fan and backstop CCW rotation

20 - Additional Gearbox Features

Double Oil Seal, Motorised Backstop Etc

eg [-] [F] See Page 22

19 - Additional Motor Features

eg [-] [A] See Page 21

For Types Without Motor

Enter [-]

18 - No of Motor Poles

[-] No motor

		50 Hz		60 Hz
4 Pole (Std)	1500 rpm	A	1800 rpm	B
4 Pole (High)	1500 rpm	K	1800 rpm	L
6 Pole (Std)	1000 rpm	C	1200 rpm	D
6 Pole (High)	1000 rpm	M	1200 rpm	N
2 Pole	3000 rpm	E	3600 rpm	F
8 Pole	750 rpm	G	900 rpm	H

[S] Dual speed or special motor

15, 16, 17 - Geared Motor Powers

Motor Power Required

eg [. 7 5] See Page 23 - 80

For reducer and non standard motor types enter [- - -]

13, 14 - Mounting Position

eg [2 B] See Page 15

12 - Motor Adaptor For Unit Types Column 10 Entries M, N, H, E, G or A

See Pages 9 to 13

For All Other Types Enter [-]

11 - Output Shaft

[C] - Standard

[N] - Inch

See Page 8

EXPLANATION & USE OF RATINGS & SERVICE FACTORS

0108

Gear unit selection is made by comparing actual loads with catalogue ratings. Catalogue ratings are based on a standard set of loading conditions, whereas actual load conditions vary according to type of application. Service Factors are therefore used to calculate an equivalent load to compare with catalogue ratings.
i.e. Equivalent Load = Actual Load x Service Factor

Mechanical ratings and service factors Fm and Fs

Mechanical ratings measure capacity in terms of life and/or strength, assuming 10 hr/day continuous running under uniform load conditions.

Catalogue ratings allow 100% overload at starting, braking or momentarily during operation up to 10 hours per day.

The unit selected must therefore have a catalogue rating at least equal to half maximum overload.

Mechanical Service Factor Fm (Table 1) is used to modify the actual load according to daily operating time, and type of loading.

Load characteristics for a wide range of applications are detailed in Table 3 opposite, which are used in deciding the appropriate Service Factor Fm from Table 1.

If overloads can be calculated, or accurately assessed, actual loads should be used instead of Fm.

For units subjected to frequent stop/starts overloads in excess of 10 times/day multiply factor Fm x Factor Fs (table 2).

For applications where units are to operate in extremely dusty or moist/humid atmospheres unit selection should be referred to Textron Power Transmission application engineers.

Table 1. Mechanical Service Factor (Fm)

Prime mover	Duration of service- hrs per day	Load classification-driven machine		
		Uniform mass acceleration factor ≤ 0.2	Moderate mass acceleration factor ≤ 3	Heavy mass acceleration factor ≤ 10
Electric motor, steam turbine or hydraulic motor	Under 3	0.80	1.00	1.50
	3 to 10	1.00	1.25	1.75
	Over 10	1.25	1.50	2.00
Multi-cylinder internal combustion engine	Under 3	1.00	1.25	1.75
	3 to 10	1.25	1.50	2.00
	Over 10	1.50	1.75	2.25
Single cylinder internal combustion engine	Under 3	1.25	1.50	2.00
	3 to 10	1.50	1.75	2.25
	Over 10	1.75	2.00	2.50

$$\text{Mass acceleration factor} = \frac{\text{all external moments of inertia *}}{\text{moment of inertia of driving motor}}$$

* calculated with reference to the motor speed

Table 2. Number of Starts Factor (Fs)

Start / Stops per hour (1)	Up to 1	5	10	40	60	≥ 200
Factor Fs	1.00	1.03	1.06	1.10	1.15	1.20

Note: (1) Intermediate values are obtained by linear interpolation

LOAD CLASSIFICATION BY APPLICATIONS

0002

Table 3

U = Uniform load

M = Moderate shock load

H = Heavy shock load

† = Refer to Textron Power Transmission

Driven Machine	type of load
Agitators	
pure liquids	U
liquids and solids	M
liquids-variable density	M
Blowers	
centrifugal	U
lobe	M
vane	U
Brewing and distilling	
bottling machinery	M
brew kettles-continuous duty	M
cookers-continuous duty	M
mash tubs-continuous duty	M
scale hopper-frequent starts	M
Can filling machines	M
Cane knifes	M
Car dumpers	H
Car pullers	M
Clarifiers	U
Classifiers	M
Clay working machinery	
brick press	H
briquette machine	H
clay working machinery	M
pug mill	M
Compressors	
centrifugal	U
lobe	M
reciprocating	
multi-cylinder	M
single cylinder	H
Conveyors-uniformly loaded or fed	
apron	U
assembly	U
belt	U
bucket	U
chain	U
flight	U
oven	U
screw	U
Conveyors-heavy duty not uniformly fed	
apron	M
assembly	M
belt	M
bucket	M
chain	M
flight	M
live roll	†
oven	M
reciprocating	H
screw	M
shaker	H

Driven Machine	type of load
Cranes	
main hoists	U
bridge travel	†
trolley travel	†
Crusher	
ore	H
stone	H
sugar	H
Dredges	
cable reels	M
conveyors	M
cutter head drives	H
jig drives	H
manoeuvring winches	M
pumps	M
screen drive	H
stackers	M
utility winches	M
Dry dock cranes	
main hoist	†
auxiliary hoist	†
boom, luffing	†
rotating, swing or slew	†
tracking, drive wheels	†
Elevators	
bucket-uniform load	U
bucket-heavy load	M
bucket-continuous	U
centrifugal discharge	U
escalators	U
freight	M
gravity discharge	U
man lifts	†
passenger	†
Fans	
centrifugal	U
cooling towers	
induced draft	†
forced draft	†
induced draft	M
large, mine, etc	M
large, industrial	M
light, small diameter	U
Feeders	
apron	M
belt	M
disc	U
reciprocating	H
screw	M
Food industry	
beef slicer	M
cereal cooker	U
dough mixer	M
meat grinders	M
Generators-not welding	U
Hammer mills	H
Hoists	
heavy duty	H
medium duty	M
skip hoist	M
Laundry washers	
reversing	M
Laundry tumblers	M
Line shafts	
driving processing equipment	M
light	U
other line shafts	U
Lumber industry	
barkers-hydraulic-mechanical	M
burner conveyor	M
chain saw and drag saw	H
chain transfer	H
craneway transfer	H
de-barking drum	H
edger feed	M
gang feed	M
green chain	M
live rolls	H
log deck	H

Driven Machine	type of load
log haul-incline	H
log haul-well type	H
log turning device	H
main log conveyor	H
off bearing rolls	M
planer feed chains	M
planer floor chains	M
planer tilting hoist	M
re-saw merry-go-round conveyor	M
roll cases	H
slab conveyor	H
small waste conveyor-belt	U
small waste conveyor-chain	M
sorting table	M
tipple hoist conveyor	M
tipple hoist drive	M
transfer conveyors	M
transfer rolls	M
tray drive	M
trimmer feed	M
waste conveyor	M
Machine tools	
bending roll	M
punch press-gear driven	H
notching press- belt driven	†
plate planers	H
tapping machine	H
other machine tools	
main drives	M
auxiliary drives	U
Metal mills	
draw bench carriage and main drive	M
pinch, dryer and scrubber rolls-reversing	†
slitters	M
table conveyors	
non-reversing	
group drives	M
individual drives	H
reversing	
wire drawing and flattening machine	M
wire winding machine	M
Mill-rotary type	
ball	H
cement kilns	H
dryers and coolers	H
kilns, other than cement	H
pebble	H
rod	
plain	H
wedge bar	H
tumbling barrels	H
Mixers	
concrete mixers -continuous	M
concrete mixers -intermittent	M
constant density	U
variable density	M
Oil industry	
chillers	M
oil well pumping	†
paraffin filter press	M
rotary kilns	M
Paper mills	
agitators, (mixers)	M
barker-auxiliaries-hydraulic	M
barker-mechanical	H
barking drum	H
beater and pulper	M
bleacher	U
calenders	M
calenders-super	H
converting machine, except cutters, platers	M
conveyors	U
couch	M
cutters-plates	H
cylinders	M
dryers	M
felt stretcher	M
felt whipper	H
jordans	M

Driven Machine	type of load
log haul	H
presses	M
pulp machine reel	M
stock chest	M
suction roll	M
washers and thickeners	M
winders	M
Printing presses	†
Pullers	
barge haul	H
Pumps	
centrifugal	U
proportioning	M
reciprocating	
single acting; 3 or more cylinders	M
double acting; 2 or more cylinders	M
single acting; 1 or 2 cylinders	†
double acting; single cylinder	†
rotary	
gear type	U
lobe, vane	U
Rubber and plastics industries	
crackers	H
laboratory equipment	M
mixed mills	H
refiners	M
rubber calenders	M
rubber mill-2 on line	M
rubber mill-3 on line	M
sheeter	M
tire building machines	†
tire and tube press openers	†
tubers and strainers	M
warming mills	M
Sand muller	M
Sewage disposal equipment	
bar screens	U
chemical feeders	U
collectors	U
dewatering screws	M
scum breakers	M
slow or rapid mixers	M
thickeners	M
vacuum filters	M
Screens	
air washing	U
rotary-stone or gravel	M
travelling water intake	U
Slab pushers	M
Steering gear	†
Stokers	U
Sugar industry	
cane knives	M
crushers	M
mills	M
Textile industry	
batchers	M
calenders	M
cards	M
dry cans	M
dryers	M
dyeing machinery	M
knitting machines	†
looms	M
mangles	M
nappers	M
pads	M
range drives	†
slashers	M
soapers	M
spinners	M
tenter frames	M
washers	M
winders	M
Windlass	†

SELECTION PROCEDURE FOR MOTORISED UNITS

0202

EXAMPLE APPLICATION DETAILS

Absorbed power of driven machine = 0.7 kW
Output speed of gearbox or Input speed of machine = 63 rev/min
Application = Uniformly loaded belt conveyor
Duration of service (hours per day) = 24hrs
Mounting position = 1
Ambient temperature = 20°C
Running time (%) = 100%

1 DETERMINE MECHANICAL SERVICE FACTOR (Fm)

Refer to Load Classification by Application, table 3, page 4

Application = Uniformly loaded belt conveyor

Conveyors-uniformly loaded or fed	
apron	U
assembly	U
belt	U
bucket	U
chain	U

U = Uniform load

Refer to mechanical service factor (Fm), table 1, page 3

Duration of service (hours per day) = 24hrs

Prime mover	Duration of service-hrs per day	Load classification-drive	
		Uniform	Moderate
Electric motor, steam turbine or hydraulic motor	Under 3	0.80	1.00
	3 to 10	1.00	1.25
	Over 10	1.25	1.50

Therefore mechanical service factor (Fm) = 1.25

If the unit is subject to frequent start/stops Fm must be multiplied by factor Fs (see table 2 page 3)

2 DETERMINE REQUIRED OUTPUT TORQUE AT GEARBOX OUTPUTSHAFT

$$\text{Absorbed output torque} = \frac{\text{Absorbed power x 9550}}{\text{Gearbox output speed}}$$

$$\frac{0.7 \times 9550}{63} = 106 \text{ Nm}$$

3 SELECT GEARED MOTOR

Refer to selection table one motor size larger than absorbed power.
Absorbed power = 0.7 kW, therefore refer to 0.75 kW selection table, page 36

Always select from 4 POLE selection table in the first instance as this offers a more economical solution.

Required output speed of gearbox = 63 rev/min

0.75 kW

4 POLE

N2 R/MIN (Output Speed)	i (Ratio)	M2 Nm (Output Torque)	Fm (Service Factor)	N (Overhung Load)	UNIT DESIGNATION (Column Entry 1 Through 20; Spaces to be filled when entering order)	Kg (Weight of Base Mount Unit)	(Motor Frame Size)
177	8	39	3.47	4000	M 0 2 2 2 8 . 0 _ M _ - _ _ . 7 5 A - -	22.5	80A
156	9.09	44	3.14	4000	9 . 0		
127	11.15	54	2.65	4000	1 1 .		
114	12.37	60	2.45	4000	1 2 .		
101	14.05	68	2.22	4000	1 4 .		
89	15.97	78	2.04	3968	1 6 .		
80	17.58	85	1.86	3878	1 8 .		
70	20.23	99	1.61	3757	2 0 .		
64	21.99	107	1.48	4000	2 2 .		
54	26.4	128	1.24	3847	2 8 .		

4 CHECK OUTPUT TORQUE

Output torque (M2) of selected unit must be equal or more than required output torque at gearbox outputshaft.

Required output torque at gearbox outputshaft = 106 Nm

0.75 kW

4 POLE

N2 R/MIN (Output Speed)	i (Ratio)	M2 Nm (Output Torque)	Fm (Service Factor)	N (Overhung Load)	UNIT DESIGNATION (Column Entry 1 Through 20; Spaces to be filled when entering order)	Kg (Weight of Base Mount Unit)	(Motor Frame Size)
177	8	39	3.47	4000	M 0 2 2 2 8 . 0 _ M _ - _ _ . 7 5 A - -	22.5	80A
156	9.09	44	3.14	4000	9 . 0		
127	11.15	54	2.65	4000	1 1 .		
114	12.37	60	2.45	4000	1 2 .		
101	14.05	68	2.22	4000	1 4 .		
89	15.97	78	2.04	3968	1 6 .		
80	17.58	85	1.86	3878	1 8 .		
70	20.23	99	1.61	3757	2 0 .		
64	21.99	107	1.48	4000	2 2 .		
54	26.4	128	1.24	3847	2 8 .		

Selected unit's output torque (M2) = 107 Nm, therefore unit is acceptable

Go to point 5

5 CHECK SERVICE FACTOR

Service factor (Fm) of selected unit must be equal or more than required service factor.

Required service factor of gearbox = 1.25

0.75 kW

4 POLE

N2 R/MIN	i	M2 Nm	Fm	N	UNIT DESIGNATION	Kg	
Output Speed	Ratio	Output Torque	Service Factor	Overhung Load	Column Entry 1 Through 20 Spaces to be filled when entering order	Weight of Base Mount Unit	Motor Frame Size
177	8	39	3.47	4000	M 0 2 2 2 8 . 0 _ M _ - _ _ . 7 5 A - -	22.5	80A
156	9.09	44	3.14	4000	9 . 0		
127	11.15	54	2.65	4000	1 1 .		
114	12.37	60	2.45	4000	1 2 .		
101	14.05	68	2.22	4000	1 4 .		
89	15.97	78	2.04	3968	1 6 .		
80	17.58	85	1.86	3878	1 8 .		
70	20.23	99	1.61	3757	2 0 .		
64	21.99	107	1.48	4000	2 2 .		
54	26.4	128	1.24	3847	2 8 .		

Selected unit's service factor (Fm) = 1.48, therefore unit is acceptable.

Alternatively a M03 unit could be selected which has a greater service factor

0.75 kW

4 POLE

N2 R/MIN	i	M2 Nm	Fm	N	UNIT DESIGNATION	Kg	
Output Speed	Ratio	Output Torque	Service Factor	Overhung Load	Column Entry 1 Through 20 Spaces to be filled when entering order	Weight of Base Mount Unit	Motor Frame Size
156	9.09	44	3.76	4000	M 0 3 2 2 9 . 0 _ M _ - _ _ . 7 5 A - -	22.5	80A
127	11.15	54	3.28	4000	1 1 .		
114	12.37	60	3.07	4000	1 2 .		
101	14.05	69	2.81	4000	1 4 .		
89	15.97	77	2.63	3935	1 6 .		
80	17.58	85	2.42	3844	1 8 .		
70	20.23	99	2.11	3689	2 0 .		
64	21.99	107	1.94	3568	2 2 .		
54	26.4	128	1.63	3045	2 8 .		
45	31.68	154	1.35	3182	3 2 .		

Selected unit's service factor (Fm) = 1.94, therefore unit is acceptable.

6 CHECK OVERHUNG LOADS

If sprocket, gear, etc is mounted on the outputshaft then refer to Overhung Loads Procedure, page 93, and compare with allowable overhung load (N) of selected unit

Allowable overhung load (N) must be equal or more than calculated overhung load (P)

0.75 kW

4 POLE

N2 R/MIN	i	M2 Nm	Fm	N	UNIT DESIGNATION	Kg	
Output Speed	Ratio	Output Torque	Service Factor	Overhung Load	Column Entry 1 Through 20 Spaces to be filled when entering order	Weight of Base Mount Unit	Motor Frame Size
177	8	39	3.47	4000	M 0 2 2 2 8 . 0 _ M _ - _ _ . 7 5 A - -	22.5	80A
156	9.09	44	3.14	4000	9 . 0		
127	11.15	54	2.65	4000	1 1 .		
114	12.37	60	2.45	4000	1 2 .		
101	14.05	68	2.22	4000	1 4 .		
89	15.97	78	2.04	3968	1 6 .		
80	17.58	85	1.86	3878	1 8 .		
70	20.23	99	1.61	3757	2 0 .		
64	21.99	107	1.48	4000	2 2 .		
54	26.4	128	1.24	3847	2 8 .		

NOTE: If any of the following conditions occur then consult Textron Power Transmission Application Engineers:-

a) Mass acceleration factor > 10
b) Ambient temperature is above 40°C

0210

UNIT VERSIONS, COLUMN 9 ENTRY

- B - Base Mounted
- E - Flange mount with B14 (C) Flange Mounting (For sizes M01 to M08 only)
- V - Base mount with B14 (C) Flange Mounting (Only available as standard for single reduction units, other units can be supplied as special units)

Flange Mounted

Letter Entry Depends on Flange Diameter See tables below

Flange Diameter	Column 9 Entry	Flange Diameter	Column 9 Entry
120	H	300	P
140	J	350	R
160	K	450	F
200	L	550	G
250	N		

Unit Size Single	Flange Dia	Column 9 entry
0512	120	H
	140	J
	160	K
	200	L
0612	120	H
	140	J
	160	K
	200	L

Unit Size Single	Flange Dia	Column 9 entry
0712	140	J
	160	K
	200	L
	250	N
0812	200	L
	250	N
	300	P

Unit Size				Flange Dia	Column 9 entry
Double	Triple	Quadru-ple	Quintu-ple		
0122	0132	-	-	120	H
				140	J
				160	K
				200	L
0222	0232	-	-	120	H
				140	J
				160	K
				200	L
0322	0332	0342	0352	120	H
				140	J
				160	K
				200	L
0422	0432	0442	0452	140	J
				160	K
				200	L
				250	N
0522	0532	0542	0552	140	J
				160	K
				200	L
				250	N
0622	0632	0642	0652	200	L
				250	N
				300	P
0722	0732	0742	0752	200	L
				250	N
				300	P
0822	0832	0842	0852	300	P
				350	R
0921	0931	0941	0951	450	F
1021	1031	1041	1051	450	F
1321	1331	1341	1351	550	G
1421	1431	1441	1451	550	G

Base and Flange Mounted

Letter Entry Depends on Flange Diameter See tables below

Flange Diameter	Column 9 Entry	Flange Diameter	Column 9 Entry
120	S	300	Y
140	T	350	Z
160	U		
200	W		
250	X		

Unit Size Single	Flange Dia	Column 9 entry
0512	120	S
	140	T
	160	U
	200	W
0612	120	S
	140	T
	160	U
	200	W

Unit Size Single	Flange Dia	Column 9 entry
0712	140	T
	160	U
	200	W
	250	X
0812	200	W
	250	X
	300	Y

Unit Size				Flange Dia	Column 9 entry
Double	Triple	Quadru-ple	Quintu-ple		
0122	0132	-	-	120	S
				140	T
				160	U
				-	-
0222	0232	-	-	120	S
				140	T
				160	U
				200	W
0322	0332	0342	0352	120	S
				140	T
				160	U
				200	W
0422	0432	0442	0452	140	T
				160	U
				200	W
				-	-
0522	0532	0542	0552	140	T
				160	U
				200	W
				-	-
0622	0632	0642	0652	200	W
				250	X
				-	-
0722	0732	0742	0752	200	W
				250	X
				300	Y
0822	0832	0842	0852	300	Y
				350	Z
0921	0931	0941	0951	450	-
1021	1031	1041	1051	450	-
1321	1331	1341	1351	550	-
1421	1431	1441	1451	550	-

0110

OUTPUTSHAFT OPTIONS

* Inch shaft has an open ended keyway, therefore no 'L11' dimension is required.

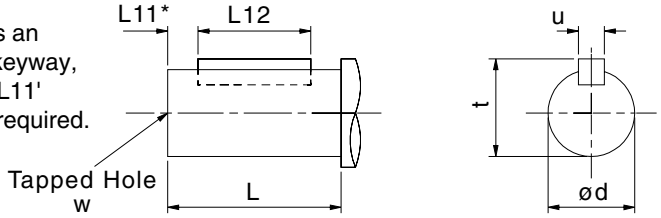

Column 11 Entry

C Standard

N Inch

OUTPUTSHAFT OPTIONS - single reduction

SIZE OF UNIT	TYPE OF OUTPUT SHAFT	COLUMN 11 ENTRY	DIMENSIONS IN MM (Inch Shaft in Inches)						
			ød	L	L11	L12	t	u	w
05	Standard	C	20.015 / 20.002	40	4	32	22.5	6	M6 x 1, 16 deep
	Inch *	N	0.7500”/0.7495”	1.575”	-	$1^{9}/_{32}$”	0.829”	$^{3}/_{16}$”	$^{1}/_{4}$” UNF x 0.63” deep
06	Standard	C	25.015 / 25.002	50	4	40	28	8	M10 x 1.5, 22deep
	Inch *	N	1.0000”/0.9995”	1.969”	-	$1^{9}/_{16}$”	1.106”	$^{1}/_{4}$”	$^{1}/_{4}$” UNF x 0.71” deep
07	Standard	C	30.015 / 30.002	60	4	50	33	8	M10 x 1.5, 22 deep
	Inch *	N	1.2500”/1.2495”	2.362”	-	2”	1.359”	$^{1}/_{4}$”	$^{1}/_{4}$” UNF x 0.71” deep
08	Standard	C	40.018 / 40.002	80	5	70	43	12	M16 x 2.0, 36 deep
	Inch *	N	1.6250”/1.6240”	3.150”	-	$2^{3}/_{8}$”	1.784”	$^{3}/_{8}$”	$^{5}/_{8}$” UNF x 1.25” deep

OUTPUTSHAFT OPTIONS - double, triple, quadruple and quintuple reduction

SIZE OF UNIT	TYPE OF OUTPUT SHAFT	COLUMN 11 ENTRY	DIMENSIONS IN MM (Inch Shaft in Inches)						
			ød	L	L11	L12	t	u	w
01	Standard	C	20.015 / 20.002	40	4	32	22.5	6	M6 x 1, 16 deep
	Inch *	N	0.7500”/0.7495”	1.575”	-	$1^{9}/_{32}$”	0.829”	$^{3}/_{16}$”	$^{1}/_{4}$” UNF x 0.63” deep
02	Standard	C	25.015 / 25.002	50	4	40	28	8	M10 x 1.5, 22 deep
	Inch *	N	1.0000”/0.9995”	1.969”	-	$1^{9}/_{16}$”	1.106”	$^{1}/_{4}$”	$^{1}/_{4}$” UNF x 0.71” deep
03	Standard	C	25.015 / 25.002	50	4	40	28	8	M10 x 1.5, 22 deep
	Inch *	N	1.0000”/0.9995”	1.969”	-	$1^{9}/_{16}$”	1.106”	$^{1}/_{4}$”	$^{1}/_{4}$” UNF x 0.71” deep
04	Standard	C	30.015 / 30.002	60	4	50	33	8	M10 x 1.5, 22 deep
	Inch *	N	1.2500”/1.2495”	2.362”	-	2”	1.359”	$^{1}/_{4}$”	$^{3}/_{8}$” UNF x 0.86” deep
05	Standard	C	35.018 / 35.002	70	7	60	38	10	M12 x 1.75, 28 deep
	Inch *	N	1.3750”/1.3745”	2.756”	-	$2^{3}/_{8}$”	1.507”	$^{5}/_{16}$”	$^{3}/_{8}$” UNF x 0.75” deep
06	Standard	C	35.018 / 35.002	70	7	60	38	10	M12 x 1.75, 28 deep
	Inch *	N	1.3750”/1.3745”	2.756”	-	$2^{3}/_{8}$”	1.507”	$^{5}/_{16}$”	$^{3}/_{8}$” UNF x 0.75” deep
07	Standard	C	40.018 / 40.002	80	5	70	43	12	M16 x 2.0, 36 deep
	Inch *	N	1.6250”/1.6240”	3.150”	-	$2^{3}/_{8}$”	1.784”	$^{3}/_{8}$”	$^{5}/_{8}$” UNF x 1.25” deep
08	Standard	C	50.018 / 50.002	100	10	80	53.5	14	M16 x 2.0, 36 deep
	Inch *	N	2.1250”/2.1240”	3.937”	-	$2^{3}/_{4}$”	2.338”	$^{1}/_{2}$”	$^{3}/_{4}$” UNF x 1.50” deep
09	Standard	C	60.030 / 60.011	120	10	100	64	18	M20 x 2.5, 42 deep
	Inch *	N	2.3750” / 2.3740”	4.72”	-	$3^{11}/_{16}$”	2.65”	0.625”	$^{3}/_{4}$” UNF 1.65” deep
10	Standard	C	70.030 / 70.011	140	15	110	74.5	20	M20 x 2.5, 42 deep
	Inch *	N	2.875” / 2.874”	5.51”	-	$4^{5}/_{8}$”	3.20”	0.75”	$^{3}/_{4}$” UNF 1.65” deep
13	Standard	C	90.035 / 90.013	170	15	140	95	25	M24 x 3.0, 50 deep
	Inch *	N	3.625” / 3.624”	6.69”	-	$5^{15}/_{16}$”	4.01”	0.875”	1” UNF 1.97” deep
14	Standard	C	100.035 / 100.013	210	15	180	106	28	M24 x 3.0, 50 deep
	Inch *	N	4.000” / 3.999”	8.27”	-	$7^{1}/_{2}$”	4.44”	1.00”	1” UNF 1.97” deep

SINGLE REDUCTION UNITS

IEC Flanges B14 - Column 12 Entry For Unit Types Column 10 Entries G, H and M Only

MOTOR FRAME / FLANGE	UNIT SIZE						
		M0512		M0612		M0712	
	RATIO COVERAGE	1.2 - 3.2	3.6 - 8.0	1.2 - 2.5	2.8 - 8.0	1.2 - 2.0	2.5 - 8.0
71	COLUMN 12	-	H	-	-	-	-
80		B	K	-	G	-	-
90		D	R	-	J	-	J
100		-	-	B	L	B	L
112		-	-	B	L	B	L
132		-	-	-	-	D	N

IEC Flanges B5 - Column 12 Entry For Unit Types Column 10 Entries G, H and M Only

MOTOR FRAME / FLANGE	UNIT SIZE								
		M0512		M0612		M0712		M0812	
	RATIO COVERAGE	1.2 - 3.2	3.6 - 8.0	1.2 - 2.5	2.8 - 8.0	1.2 - 2.0	2.5 - 8.0	1.2 - 3.2	3.6 - 8.0
63	COLUMN 12 ENTRY	-	F	-	V	-	-	-	-
71		-	G	-	D	-	-	-	-
80		A	J	W	F	-	F	-	D
90		C	Q	Y	H	-	H	-	E
100		-	-	A	K	A	K	A	F
112		-	-	A	K	A	K	A	F
132		-	-	N	P	C	M	B	G
160		-	-	-	-	E	P	C	H

NEMA Flanges C Face - Column 12 Entry For Unit Types Column 10 Entries A, E and N Only

MOTOR FRAME / FLANGE	UNIT SIZE								
		M0512		M0612		M0712		M0812	
	RATIO	1.2 - 3.2	3.6 - 8.0	1.2 - 2.5	2.8 - 8.0	1.2 - 2.0	2.5 - 8.0	1.2 - 3.2	3.6 - 8.0
56c	COLUMN 12	T	U	-	Q	-	Q	-	M
143/145TC		V	W	-	R	-	R	-	N
182/184TC		X	-	S	T	S	T	J	P
213/215TC		-	-	U	-	U	V	K	Q
254/256TC		-	-	-	-	W	-	L	U

DOUBLE REDUCTION UNITS

IEC Flanges B14 - Column 12 Entry For Unit Types Column 10 Entries G, H and M Only

MOTOR FRAME / FLANGE	UNIT SIZE, NUMBER OF REDUCTIONS, REVISION NUMBER														
		M0122		M0222		M0322		M0422		M0522		M0622		M0722	
	RATIO COVERAGE	3.6 - 9.0	11. - 56.	3.6 - 14.	16. - 56.	3.6 - 14.	16. - 56.	3.6 - 11.	12. - 56.	3.6 - 11.	12. - 56.	5.0 - 12.	14. - 63.	3.6 - 9.0	11. - 56.
71	COLUMN 12	H	H	-	H	-	H	-	-	-	-	-	-	-	-
80		B	K	B	K	B	K	-	G	-	G	-	G	-	G
90		D	R	D	R	D	R	-	J	-	J	-	J	-	J
100		-	-	-	-	-	-	B	L	B	L	B	L	B	L
112		-	-	-	-	-	-	B	L	B	L	B	L	B	L
132		-	-	-	-	-	-	-	-	-	-	-	-	D	N

IEC Flanges B5 - Column 12 Entry For Unit Types Column 10 Entries G, H and M Only

MOTOR FRAME / FLANGE	UNIT SIZE, NUMBER OF REDUCTIONS, REVISION NUMBER																									
		M0122		M0222		M0322		M0422		M0522		M0622		M0722		M0822		M0921		M1021		M1321			M1421		
	RATIO COVERAGE	3.6 - 9.0	11. - 56.	3.6 - 14.	16. - 56.	3.6 - 14.	16. - 56.	3.6 - 11.	12. - 56.	3.6 - 11.	12. - 56.	5.0 - 12.	14. - 63.	3.6 - 9.0	11. - 56.	3.6 - 14.	16. - 56.	1.4 - 14.	16. - 71.	1.4 - 14.	16. - 71.	2.8 - 14.	16. - 45.	50. - 71.	2.8 - 14.	16. - 45.	50. - 71.
63	COLUMN 12 ENTRY	F	F	-	F	-	F	-	V	-	V	-	V	-	-	-	-	-	-	-	-	-	-	-	-	-	-
71		G	G	-	G	-	G	-	D	-	D	-	D	-	-	-	-	-	-	-	-	-	-	-	-	-	-
80		A	J	A	J	A	J	W	F	W	F	W	F	-	F	-	D	-	E	-	-	-	-	-	-	-	-
90		C	Q	C	Q	C	Q	Y	H	Y	H	Y	H	-	H	-	E	-	F	-	-	-	-	-	-	-	-
100		-	-	-	-	-	-	A	K	A	K	A	K	A	K	A	F	-	G	-	E	-	G	N	-	S	W
112		-	-	-	-	-	-	A	K	A	K	A	K	A	K	A	F	-	G	-	E	-	G	N	-	S	W
132		-	-	-	-	-	-	N	P	N	P	N	P	C	M	B	G	-	H	-	F	-	H	P	-	T	X
160		-	-	-	-	-	-	-	-	-	-	-	-	E	P	C	H	A	J	A	G	A	J	Q	A	G	N
180		-	-	-	-	-	-	-	-	-	-	-	-	-	-	-	-	B	K	B	H	B	K	R	B	H	P
200		-	-	-	-	-	-	-	-	-	-	-	-	-	-	-	-	C	L	C	J	C	L	S	C	J	Q
225		-	-	-	-	-	-	-	-	-	-	-	-	-	-	-	-	D	M	D	K	D	M	T	D	K	R
250		-	-	-	-	-	-	-	-	-	-	-	-	-	-	-	-	-	-	-	-	E	U	-	E	L	-
280		-	-	-	-	-	-	-	-	-	-	-	-	-	-	-	-	-	-	-	-	F	W	-	F	M	-

NEMA Flanges C Face - Column 12 Entry For Unit Types Column 10 Entries A, E and N Only

MOTOR FRAME / FLANGE	UNIT SIZE, NUMBER OF REDUCTIONS, REVISION NUMBER																									
		M0122		M0222		M0322		M0422		M0522		M0622		M0722		M0822		M0921		M1021		M1321			M1421		
	RATIO	3.6 - 9.0	11. - 56.	3.6 - 14.	16. - 56.	3.6 - 14.	16. - 56.	3.6 - 11.	12. - 56.	3.6 - 11.	12. - 56.	5.0 - 12.	14. - 63.	3.6 - 9.0	11. - 56.	3.6 - 14.	16. - 56.	1.4 - 14.	16. - 71.	1.4 - 14.	16. - 71.	2.8 - 14.	16. - 45.	50. - 71.	2.8 - 14.	16. - 45.	50. - 71.
56c	COLUMN 12 ENTRY	T	U	T	U	T	U	-	Q	-	Q	-	Q	-	Q	-	M	-	-	-	-	-	-	-	-	-	-
143/145TC		V	W	V	W	V	W	-	R	-	R	-	R	-	R	-	N	-	-	-	-	-	-	-	-	-	-
182/184TC		X	-	X	-	X	-	S	T	S	T	S	T	S	T	J	P	-	S	-	P	-	N	A	-	W	X
213/215TC		-	-	-	-	-	-	U	-	U	-	U	-	U	V	K	Q	-	T	-	Q	-	P	B	-	N	A
254/256TC		-	-	-	-	-	-	-	-	-	-	-	-	W	-	L	U	P	U	L	R	F	Q	C	E	P	B
284/286TC		-	-	-	-	-	-	-	-	-	-	-	-	-	-	-	-	Q	V	M	S	G	R	D	F	Q	C
324/326TC		-	-	-	-	-	-	-	-	-	-	-	-	-	-	-	-	R	W	N	T	H	S	E	G	R	D
364/365TC		-	-	-	-	-	-	-	-	-	-	-	-	-	-	-	-	-	-	-	-	J	T	-	H	S	-
404/405TC		-	-	-	-	-	-	-	-	-	-	-	-	-	-	-	-	-	-	-	-	K	U	-	J	T	-

TRIPLE REDUCTION UNITS

IEC Flanges B14 - Column 12 Entry For Unit Types Column 10 Entries G, H and M Only

MOTOR FRAME / FLANGE	UNIT SIZE, NUMBER OF REDUCTIONS, REVISION NUMBER								
		M0132	M0232	M0332	M0432	M0532	M0632	M0732	M0832
	RATIO COVERAGE	56. - 200	56. - 200	56. - 200	56. - 200	56. - 200	63. - 225	56. - 200	56. - 200
71	COLUMN 12	H	H	H	H	H	H	-	-
80		K	K	K	K	K	K	G	G
90		R	R	R	R	R	R	J	J
100		-	-	-	-	-	-	-	L
112		-	-	-	-	-	-	-	L
132		-	-	-	-	-	-	-	N

IEC Flanges B5 - Column 12 Entry For Unit Types Column 10 Entries G, H and M Only

MOTOR FRAME / FLANGE	UNIT SIZE, NUMBER OF REDUCTIONS, REVISION NUMBER																
		M0132	M0232	M0332	M0432	M0532	M0632	M0732	M0832	M0931	M1031	M1331			M1431		
	RATIO COVERAGE	56. - 200	56. - 200	56. - 200	56. - 200	56. - 200	63. - 225	56. - 200	56. - 200	56. - 250	56. - 250	40. - 50.	56. - 160	180 - 250	40. - 50.	56. - 160	180 - 250
63	COLUMN 12 ENTRY	*F*	*F*	*F*	*F*	*F*	*F*	-	-	-	-	-	-	-	-	-	-
71		*G*	*G*	*G*	*G*	*G*	*G*	-	-	-	-	-	-	-	-	-	-
80		*J*	*J*	*J*	*J*	*J*	*J*	*F*	F	L	E	-	-	-	-	-	-
90		*Q*	*Q*	*Q*	*Q*	*Q*	*Q*	*H*	H	M	F	-	-	-	-	-	-
100		-	-	-	-	-	-	*K*	K	N	G	-	G	N	-	G	N
112		-	-	-	-	-	-	*K*	K	N	G	-	G	N	-	G	N
132		-	-	-	-	-	-	-	M	-	H	-	H	P	-	H	P
160		-	-	-	-	-	-	-	P	-	J	A	J	Q	A	J	Q
180		-	-	-	-	-	-	-	-	-	K	B	K	R	B	K	R
200		-	-	-	-	-	-	-	-	-	L	C	L	S	C	L	S
225		-	-	-	-	-	-	-	-	-	M	D	M	T	D	M	T
250		-	-	-	-	-	-	-	-	-	-	E	U	-	E	W	-
280		-	-	-	-	-	-	-	-	-	-	F	W	-	F	X	-

NEMA Flanges C Face - Column 12 Entry For Unit Types Column 10 Entries A, E and N Only

MOTOR FRAME / FLANGE	UNIT SIZE, NUMBER OF REDUCTIONS, REVISION NUMBER																
		M0132	M0232	M0332	M0432	M0532	M0632	M0732	M0832	M0931	M1031	M1331			M1431		
	RATIO	56. - 200	56. - 200	56. - 200	56. - 200	56. - 200	63. - 225	56. - 200	56. - 200	56. - 250	56. - 250	40. - 50.	56. - 160	180 - 250	40. - 50.	56. - 160	180 - 250
56c	COLUMN 12 ENTRY	*U*	*U*	*U*	*U*	*U*	*U*	*Q*	Q	X	-	-	-	-	-	-	-
143/145TC		*W*	*W*	*W*	*W*	*W*	*W*	*R*	R	Y	-	-	-	-	-	-	-
182/184TC		-	-	-	-	-	-	*T*	T	Z	S	-	N	A	-	N	A
213/215TC		-	-	-	-	-	-	-	V	-	T	-	P	B	-	P	B
254/256TC		-	-	-	-	-	-	-	-	-	U	F	Q	C	F	Q	C
284/286TC		-	-	-	-	-	-	-	-	-	V	G	R	D	G	R	D
324/326TC		-	-	-	-	-	-	-	-	-	W	H	S	E	H	S	E
364/365TC		-	-	-	-	-	-	-	-	-	-	J	T	-	J	T	-
404/405TC		-	-	-	-	-	-	-	-	-	-	K	U	-	K	U	-

QUADRUPLE REDUCTION UNITS

IEC Flanges B14 - Column 12 Entry For Unit Types Column 10 Entries G, H and M Only

MOTOR FRAME / FLANGE		UNIT SIZE, NUMBER OF REDUCTIONS, REVISION NUMBER									
		M0342	M0442	M0542	M0642	M0742	M0842	M0941	M1041	M1341	M1441
71	COLUMN 12	H	H	H	H	H	-	-	-	-	-
80		K	K	K	K	K	G	G	G	G	G
90		R	R	R	R	R	J	J	J	J	J
100		-	-	-	-	-	L	L	L	L	L
112		-	-	-	-	-	L	L	L	L	L
132		-	-	-	-	-	-	-	N	N	N

IEC Flanges B5 - Column 12 Entry For Unit Types Column 10 Entries G, H and M Only

MOTOR FRAME / FLANGE		UNIT SIZE, NUMBER OF REDUCTIONS, REVISION NUMBER									
		M0342	M0442	M0542	M0642	M0742	M0842	M0941	M1041	M1341	M1441
63	COLUMN 12 ENTRY	F	F	F	F	F	V	V	-	-	-
71		G	G	G	G	G	D	D	-	-	-
80		J	J	J	J	J	F	F	F	F	F
90		Q	Q	Q	Q	Q	H	H	H	H	H
100		-	-	-	-	-	K	K	K	K	K
112		-	-	-	-	-	K	K	K	K	K
132		-	-	-	-	-	P	P	M	M	M
160		-	-	-	-	-	-	-	P	P	P

NEMA Flanges C Face - Column 12 Entry For Unit Types Column 10 Entries A, E and N Only

MOTOR FRAME / FLANGE		UNIT SIZE, NUMBER OF REDUCTIONS, REVISION NUMBER									
		M0342	M0442	M0542	M0642	M0742	M0842	M0941	M1041	M1341	M1441
56c	COLUMN 12	U	U	U	U	U	Q	Q	Q	Q	Q
143/145TC		W	W	W	W	W	R	R	R	R	R
182/184TC		-	-	-	-	-	T	T	T	T	T
213/215TC		-	-	-	-	-	-	-	V	V	V

QUINTUPLE REDUCTION UNITS

IEC Flanges B14 - Column 12 Entry For Unit Types Column 10 Entries G, H and M Only

MOTOR FRAME / FLANGE	UNIT SIZE, NUMBER OF REDUCTIONS, REVISION NUMBER										
		M0352	M0452	M0552	M0652	M0752	M0852	M0951	M1051	M1351	M1451
71		H	H	H	H	H	H	H	-	-	-
80		K	K	K	K	K	K	K	G	G	G
90		R	R	R	R	R	R	R	J	J	J

IEC Flanges B5 - Column 12 Entry For Unit Types Column 10 Entries G, H and M Only

MOTOR FRAME / FLANGE	UNIT SIZE, NUMBER OF REDUCTIONS, REVISION NUMBER										
		M0352	M0452	M0552	M0652	M0752	M0852	M0951	M1051	M1351	M1451
63	COLUMN 12	F	F	F	F	F	F	F	-	-	-
71		*G*	*G*	*G*	*G*	*G*	*G*	*G*	-	-	-
80		*J*	*J*	*J*	*J*	*J*	*J*	*J*	*F*	*F*	*F*
90		*Q*	*Q*	*Q*	*Q*	*Q*	*Q*	*Q*	*H*	*H*	*H*
100		-		-	-	-	-	-	*K*	*K*	*K*
112		-		-	-	-	-	-	*K*	*K*	*K*
132		-		-	-	-	-	-	-	-	-

NEMA Flanges C Face - Column 12 Entry For Unit Types Column 10 Entries A, E and N Only

MOTOR FRAME / FLANGE	UNIT SIZE, NUMBER OF REDUCTIONS, REVISION NUMBER										
		M0352	M0452	M0552	M0652	M0752	M0852	M0951	M1051	M1351	M1451
56c		*U*	*U*	*U*	*U*	*U*	*U*	*U*	*Q*	*Q*	*Q*
143/145TC		*W*	*W*	*W*	*W*	*W*	*W*	*W*	*R*	*R*	*R*
182/184TC		-	-	-	-	-	-	-	*T*	*T*	*T*

LUBRICATION

0107

Gear units 01, 02, 03, 04, 05, 06 & 07 will be supplied filled with a quantity of EP mineral oil (TPT Grade 6E) appropriate to the intended mounting position. However if, as requested, the unit is supplied without lubricant then the oil quantity required is obtained from Table 2. Gear units 08, 09, 10, 13 & 14 are supplied without lubricant. Recommended lubricants are listed in the Approved Lubricant scheme booklet.

LUBRICATION CHANGE PERIOD

- Sizes 01, 02 and 03 are filled for life.
- All other sizes of Series M will require an oil change:
  - 10,000 hours for mineral oil
  - 20,000 hours for synthetic oil

TEMPERATURE LIMITATIONS

The standard lubricant is suitable for operation in ambient temperatures of 0° to 35°C, outside of this consult Table 1 or Textron Power Transmission Application Engineers.

TABLE 1 OIL GRADES

LUBRICANT	AMBIENT TEMPERATURE RANGE		
	-5°C to 20°C (type E) -30°C to 20°C (type H)	0°C to 35°C	20°C to 50°C
EP Mineral Oil (type E)	5E (VG 220)	6E (VG 320)	7E (VG 460)
Polyalphaolefin based Synthetic with EP additives (type H)	5H (VG 220)	5H (VG 220)	6H (VG 320)

TABLE 2 LUBRICANT QUANTITY (Litres)

Oil quantities are approximate, fill gearbox until oil escapes from level plug hole

SINGLE REDUCTION					
Unit Size		M0512	M0612	M0712	M0812
MOUNTING POSITION	1	0.3	0.6	1.2	2.5
	2	0.3	0.6	1.2	2.5
	3	0.3	0.6	1.2	2.5
	4	0.4	0.7	1.5	3.5
	5	0.4	0.6	1.2	2.5
	6	0.5	1.0	2.0	4.1

DOUBLE REDUCTION AND FINAL STAGE QUADRUPLE AND QUINTUPLE REDUCTION													
Unit Size		M0122	M0222	M0322	M0422	M0522	M0622	M0722	M0822	M0921	M1021	M1321	M1421
MOUNTING POSITION	1	0.7	0.75	0.75	1.5	1.5	2.0	2.6	3.7	10.5	11.0	17.0	24.0
	2	0.7	0.75	0.75	1.8	1.8	2.0	3.1	6.2	12.0	22.0	31.0	49.0
	3	0.7	0.75	0.75	1.6	1.6	1.8	2.8	5.4	12.0	22.0	31.0	49.0
	4	0.7	0.75	0.75	1.9	1.9	2.1	3.3	7.3	12.0	19.0	28.0	41.0
	5	1.0	1.45	1.45	1.9	1.9	2.1	3.2	6.4	16.8	32.0	47.0	72.0
	6	1.0	1.45	1.45	2.7	2.7	2.9	4.9	9.1	16.4	26.0	38.0	65.0

TRIPLE REDUCTION AND FINAL STAGE QUADRUPLE AND QUINTUPLE REDUCTION													
Unit Size		M0132	M0232	M0332	M0432	M0532	M0632	M0732	M0832	M0931	M1031	M1331	M1431
MOUNTING POSITION	1	0.7	0.7	0.7	1.3	1.3	1.9	2.3	3.4	11.5	11.0	17.0	24.0
	2	0.7	0.7	0.7	1.6	1.6	1.8	2.9	6.0	11.5	23.0	33.0	50.0
	3	0.7	0.8	0.8	1.5	1.5	1.7	2.6	5.8	11.5	23.0	33.0	50.0
	4	0.7	0.8	0.8	1.9	1.9	2.1	3.3	7.9	11.5	20.0	30.0	43.0
	5	1.0	1.4	1.4	1.9	1.9	1.9	2.9	6.4	16.8	32.0	47.0	72.0
	6	1.1	1.5	1.5	2.5	2.5	2.7	4.7	9.3	16.5	27.0	40.0	67.0

PRIMARY STAGE QUADRUPLE REDUCTION (Quantities obtained from above double and triple for sizes indicated)										
Unit Size	M0342	M0442	M0542	M0642	M0742	M0842	M0941	M1041	M1341	M1441
PRIMARY UNIT	M0122	M0322	M0322	M0322	M0322	M0522	M0522	M0722	M0722	M0722
SECONDARY UNIT	M0322	M0422	M0522	M0622	M0722	M0822	M0921	M1021	M1321	M1421

PRIMARY STAGE QUINTUPLE REDUCTION (Quantities obtained from above double and triple for sizes indicated)										
Unit Size	M0352	M0452	M0552	M0652	M0752	M0852	M0951	M1051	M1351	M1451
PRIMARY UNIT	M0132	M0332	M0332	M0332	M0332	M0532	M0532	M0732	M0732	M0732
SECONDARY UNIT	M0322	M0422	M0522	M0622	M0722	M0822	M0921	M1021	M1321	M1421

MOUNTING POSITIONS

0102

COLUMN 13 ENTRY

Enter [-] for units with no oil fill

Base Mounted Units

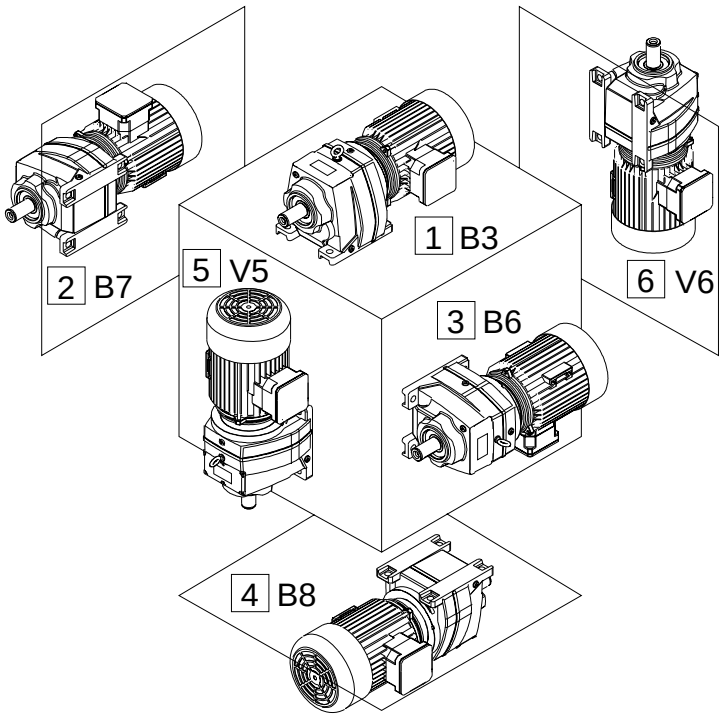

Flange Mounted Units

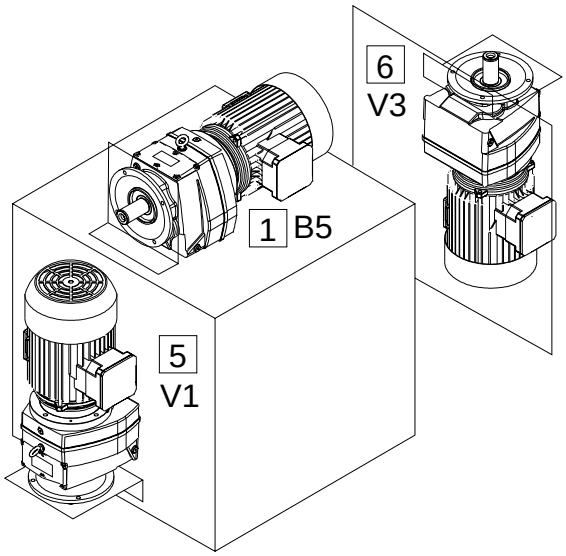

MOUNTING POSITIONS - SHOWN AS MOTORISED - APPLIES ALSO FOR REDUCERS

COLUMN 14 ENTRY

ALL MOTORS

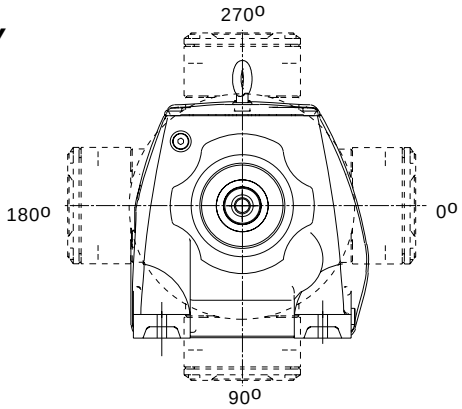

Column 14 Entry	Terminal Box Position
A	0°
B	90°
C	180°
D	270°
-	Reducer or no motor fitted

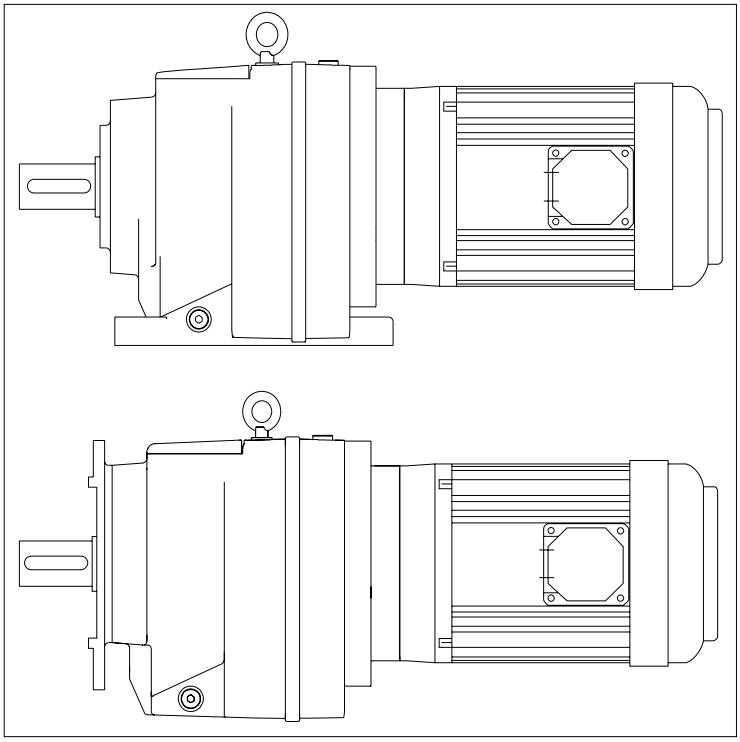

MOTORISED

SERIES M

TEXTRON POWER TRANSMISSION

MOTOR PERFORMANCE DATA

0205

TEFC, CLASS F, 40°C AMBIENT TEMP. AS; BS DESIGN B CONTINUOUS DUTY S.F. 1.0, 380, 400, 415 50HZ

ALUMINIUM MOTORS TYPICAL PERFORMANCE (400 V)

kW	Full Load (RPM)	Frame No.	Current at 400V (Amps)	Efficiency		Power Factor		D.O.L. Start Current (% FLT)	D.O.L. Start Torque (% FLT)	Pull Up Torque (% FLT)	Pull Out Torque (% FLT)	Rotor Inertia GD^2 (kg,m^2)	Approx Weight (kg)
				100% Load (%)	75% Load (%)	100% Load (Cos ø)	75% Load (Cos ø)						
0.12	2790	63	0.44	61.2	59.0	0.65	0.58	490	200	170	280	0.0020	4.5
	1360	63	0.45	60.5	60.0	0.62	0.51	450	200	180	260	0.0022	4.5
	870	63	0.59	52.0	51.0	0.57	0.49	380	175	158	200	0.0029	4.5
0.18	2800	63	0.59	64.0	61.5	0.70	0.62	490	200	170	280	0.0021	4.5
	1370	63	0.64	62.0	62.4	0.64	0.59	430	200	180	260	0.0028	4.5
	900	71	0.68	60.0	61.9	0.60	0.51	380	175	158	200	0.0053	6.5
0.25	2800	63	0.76	66.2	64.6	0.75	0.67	550	200	170	280	0.0023	4.5
	1400	71	0.82	65.5	64.0	0.67	0.59	490	200	180	250	0.0034	6.5
	900	71	0.90	63.0	63.3	0.61	0.53	400	175	158	210	0.0064	6.5
0.37	2800	71	0.92	71.0	69.0	0.83	0.76	670	200	170	280	0.0023	6.5
	1400	71	1.13	68.5	66.2	0.70	0.61	530	200	180	250	0.0045	6.5
	920	80A	1.29	66.7	65.2	0.62	0.58	450	175	158	210	0.0081	9.5
0.55	2780	71	1.35	74.3	72.8	0.80	0.74	680	200	170	260	0.0023	6.5
	1420	80A	1.56	73.5	72.0	0.72	0.64	590	200	180	250	0.0067	9.5
	920	80B	1.76	69.5	67.5	0.65	0.58	490	175	158	220	0.011	11
0.75	2830	80A	1.66	76.5	77.0	0.85	0.80	690	200	170	250	0.0045	9.5
	1415	80A	1.97	75.3	74.3	0.73	0.67	580	200	180	250	0.0081	9.5
	920	90S	2.16	73.8	72.3	0.67	0.60	510	175	158	210	0.016	13.5
1.1	2820	80B	2.36	79.0	79.5	0.85	0.81	795	200	170	250	0.0054	11
	1410	90S	2.70	77.8	76.8	0.76	0.69	640	200	180	240	0.013	13.5
	925	90L	3.05	74.0	76.8	0.67	0.60	520	175	158	220	0.022	14.5
1.5	2860	90S	3.18	80.0	80.5	0.85	0.82	755	200	170	270	0.0099	13.5
	1420	90L	3.50	80.0	78.2	0.79	0.71	650	200	180	240	0.016	14.5
	925	100L	3.88	79.0	78.2	0.70	0.64	590	175	158	210	0.03	24
2.2	2860	90L	4.59	82.3	82.8	0.84	0.82	795	200	170	270	0.014	14.5
	1420	90LA	5.03	81.0	81.2	0.78	0.72	760	200	180	240	0.022	20
	1425	100L	4.89	82.3	81.6	0.79	0.73	700	200	180	240	0.03	24
	950	112M	5.40	81.6	80.8	0.72	0.65	640	175	158	220	0.054	31
3	2870	100L	5.94	83.8	84.3	0.87	0.85	770	200	170	270	0.021	24
	1425	100L	6.51	83.2	83.0	0.80	0.74	700	200	180	240	0.042	24
	955	132SA	6.74	83.2	83.0	0.77	0.72	680	175	158	230	0.14	48
4	2880	112M	7.7	85.3	85.8	0.88	0.86	830	200	160	260	0.042	31
	1435	112M	8.45	85.3	84.0	0.80	0.75	760	200	160	240	0.059	31
	960	132M	9.19	84.5	83.0	0.75	0.68	685	175	158	240	0.16	52
5.5	2900	132SA	10.5	86.7	86.2	0.88	0.83	830	200	170	250	0.059	48
	1430	112MA	11.7	85.7	85.5	0.79	0.75	820	200	180	230	0.085	45
	1440	132SA	11.5	86.7	85.5	0.80	0.75	760	200	180	230	0.095	48
	960	132M	12.0	85.5	84.8	0.77	0.72	720	175	158	230	0.21	52
7.5	2900	132SB	14.2	87.9	87.9	0.87	0.85	765	200	170	240	0.07	53
	1445	132M	14.9	87.9	87.9	0.83	0.78	730	200	180	230	0.13	52
	960	160MA	16.0	86.5	84.7	0.79	0.73	680	175	158	230	0.37	81
9.2	1440	132MA	18.15	87.7	87.9	0.84	0.80	760	200	180	230	0.19	78
11	2900	160MA	20.5	88.5	88.0	0.88	0.86	795	200	170	230	0.15	81
	1440	132MB	21.1	88.4	88.1	0.85	0.82	820	200	180	230	0.22	88
	1450	160MA	20.7	88.5	88.5	0.87	0.83	790	200	180	230	0.29	81
	965	160L	22.3	88.0	88.0	0.81	0.76	730	175	158	220	0.54	95
15	2910	160MB	26.6	90.5	90.5	0.90	0.89	820	200	170	230	0.20	78
	1455	160L	27.9	90.5	90.5	0.86	0.81	780	200	180	220	0.34	95
18.5	2915	160L	32.6	91.0	91.0	0.90	0.89	775	200	170	230	0.24	95

MOTOR PERFORMANCE DATA

0104

TEFC, CLASS F, 40°C AMBIENT TEMP. AS; BS DESIGN B CONTINUOUS DUTY S.F. 1.0, 380, 400, 415 50HZ

CAST IRON MOTORS TYPICAL PERFORMANCE (400 V)

kW	Full Load (RPM)	Frame No.	Current at 400V (Amps)	Efficiency		Power Factor		D.O.L. Start Current (% FLT)	D.O.L. Start Torque (% FLT)	Pull Up Torque (% FLT)	Pull Out Torque (% FLT)	Rotor Inertia GD^2 (kg,m^2)	Approx Weight (kg)
				100% Load (%)	75% Load (%)	100% Load (Cos ø)	75% Load (Cos ø)						
4	723	D160M	9.8	85.9	85.7	75.5	67.9	532	198	188	283	0.351	113
5.5	720	D160M	12.9	84.5	84.9	75.5	68.2	575	217	195	331	0.0821	113
7.5	720	D160L	17	86.1	86.9	77.3	70.3	576	216	194	340	0.1141	133
11	730	D180L	24	87.5	87.8	77.4	70.2	657	230	207	297	0.167	181
15	970	D180L	29	89.5	89.8	82.7	77.9	640	213	191	303	0.167	181
	730	D200L	32	89.1	89.2	77.8	71.2	625	186	167	298	0.325	232
18.5	1470	D180M	34	90.5	90.7	89.1	84.7	757	245	220	315	0.135	167
	975	D200L	36	89.9	90.1	84.0	78.7	651	213	191	329	0.302	232
	730	D225S	38	90.1	90.2	77.0	71.0	680	200	180	300	0.481	287
22	2940	D180M	39	90.8	90.6	90.7	88.9	752	252	226	344	0.071	167
	1470	D180L	40	91.3	91.8	88.1	84.2	674	225	202	309	0.136	181
	975	D200L	42	89.9	90.3	84.7	81.1	669	217	195	316	0.347	232
	730	D225M	44	90.6	90.7	77.0	72.2	682	213	191	301	0.531	322
30	2945	D200L	53	91.6	91.3	90.0	87.9	742	266	239	346	0.119	232
	1470	D200L	55	91.9	92.1	88.5	83.4	664	231	207	303	0.245	232
	980	D225M	55	91.7	91.8	85.2	82.6	612	235	211	284	0.525	322
	730	D250M	60	90.8	90.8	82.3	76.8	582	198	178	298	0.809	385
37	2945	D200L	64	92.0	91.3	92.0	89.8	782	248	223	298	0.809	232
	1475	D225S	66	92.4	92.5	87.5	84.9	658	221	198	306	0.39	287
	980	D250M	68	91.5	91.4	86.8	83.1	688	212	190	323	0.807	385
	735	D280S	74	91.5	91.5	79.0	71.0	660	200	180	240	1.381	510
45	2950	D225M	77	92.5	92.4	89.8	87.8	788	275	247	369	0.221	322
	1475	D225M	80	92.5	92.5	88.8	86.2	743	209	188	314	0.45	322
	980	D280S	82	92.5	92.3	86.0	83.0	700	230	207	270	1.334	510
	735	D280M	90	92.0	91.8	79.0	71.0	660	200	180	240	1.721	600
55	2965	D250M	95	93.0	92.1	89.2	86.3	770	195	175	368	0.305	385
	1475	D250M	98	93.0	92.8	88.9	86.0	685	223	200	316	0.64	385
	980	D280M	100	92.8	92.5	86.0	83.0	700	230	207	270	1.598	600
75	2965	D280S	127	93.6	93.0	91.0	89.0	780	220	200	250	0.584	510
	1485	D280S	133	93.8	93.5	87.0	85.0	750	220	200	240	1.045	510
90	2965	D280M	152	93.9	93.3	91.0	89.0	780	220	200	250	0.665	600
	1485	D280M	159	94.2	93.9	87.0	85.0	750	220	200	240	1.396	600

NOTE.
1. The above are typical values based on test.
2. Actual load & full voltage starting, According to BS 4999, AS 1359.
3. Tolerance according to BS4999, AS1359.
4. Efficiency, power factor, speed and torque are the same for other voltages. Current values vary inversely with voltage.
5. Data subject to change without notice.

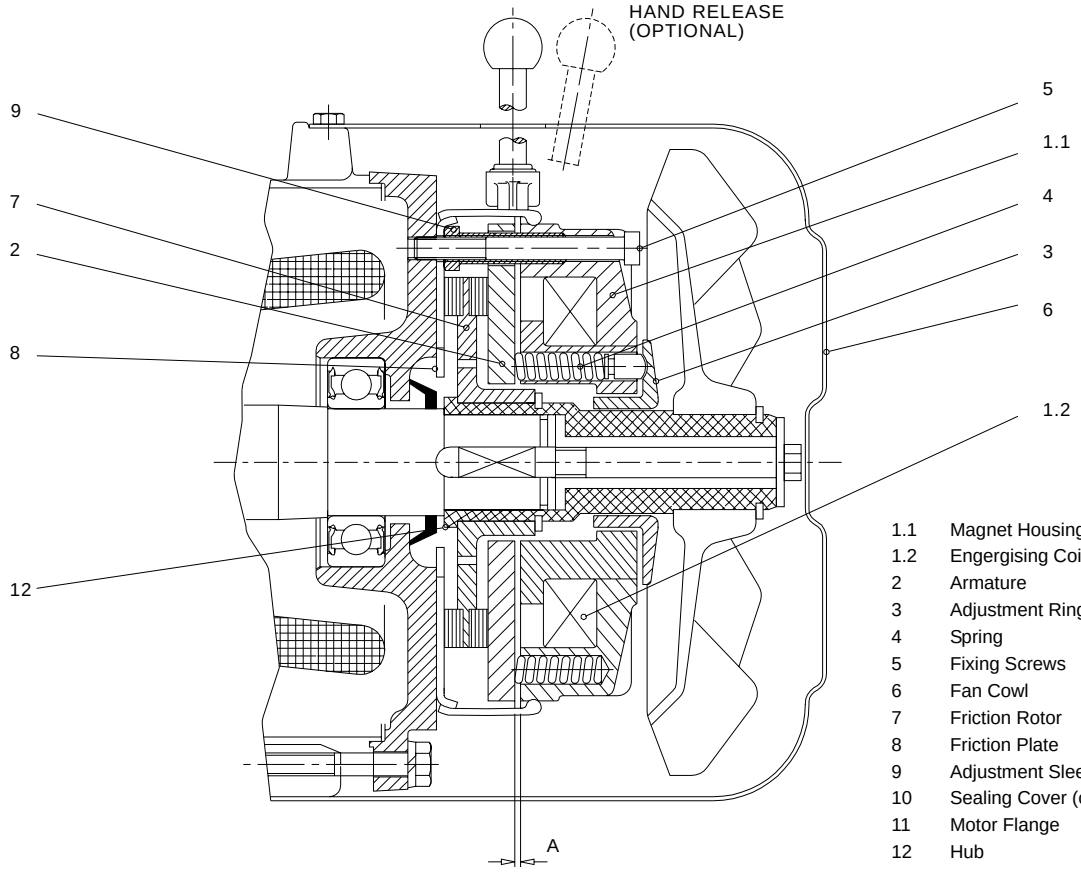

1.1	Magnet Housing
1.2	Engergising Coil
2	Armature
3	Adjustment Ring
4	Spring
5	Fixing Screws
6	Fan Cowl
7	Friction Rotor
8	Friction Plate
9	Adjustment Sleeves
10	Sealing Cover (optional)
11	Motor Flange
12	Hub

BRAKE MOTORS

Construction and Operating Principle
The magnet housing (1.1) of the spring applied brake contains the permanently fitted energising coil (1.2) with its supply lead protruding from the brake periphery. In the adjustment ring (3) are fitted the pressure springs (4), which push the friction rotor (7) via the armature (2) against the static friction plate (8) and thus against the motor flange (11). The braking effect is achieved thereby. The air gap 'A' is adapted by means of sleeves (9). The air gap 'A' cannot be re-adjusted. It is recommended to replace the friction rotor (7) when it is worn (end of wear). The friction rotor (7) has a star shaped bore (size 10,11 and 14) or a square bore (size 08, 13, 16 and 19) and can thus be glided axially on the hub (12). When applying a DC current to the energising coil (1.2), a magnetic force is induced, compensating the effect of the spring. lifting the armature (2) and thereby releasing the brake. No axial load is applied by the brake to the shaft that is to be decelerated

Condition upon Delivery
The brake motor is supplied ready for use, ie the air gap 'A' is pre-set to the specified value at the factory by means of the sleeves (9). The required nominal torque M_2 is also adjusted at the factory.

MOTOR FRAME SIZE		63	71	80	90	100	112	132S	132M	160
BRAKE SIZE		08	08	10	11	13	14	14	16	19
BRAKE TORQUE (M_2)	Nm	2.5	5	10	20	40	65	65	100	170
COUPLING TIME (t_1)	Ms	18	18	20	30	45	86	86	90	130

For larger frame sizes standard proprietary brake motors are available. For details contact Textron Power Transmission

0205

B14 'C' FACE

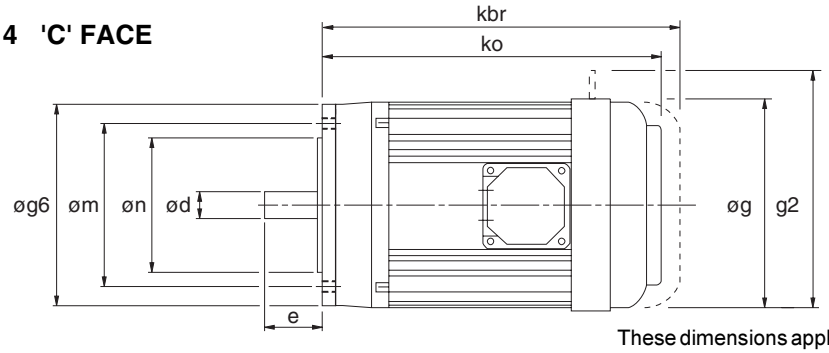

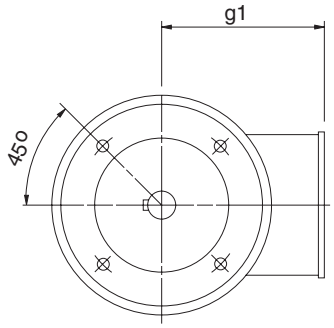

These dimensions apply to Textron Power Transmission standard motors

MOTOR FRAME SIZE	øg6	øm	øn	ød	e	ko	kbr	øg	g1	g2	FIXING BOLTS
71	105	85	70	14	30	220.5	265	138	114	167	4xM6
80A	120	100	80	19	40	238.5	291	157	124.5	190	4xM6
80B	120	100	80	19	40	247.5	300	157	124.5	190	4xM6
90S	140	115	95	24	50	260	312	177	133	218	4xM8
90L	140	115	95	24	50	275	327	177	133	218	4xM8
90LA	140	115	95	24	50	284	336	177	133	218	4xM8
100L	160	130	110	28	60	310	370	197	144	238	4xM8
112M	160	130	110	28	60	325	399	219	155	238	4xM8
112MA	160	130	110	28	60	344	419	219	155	238	4xM8
132SA	200	165	130	38	80	392	475	235	172	288	4xM10
132M	200	165	130	38	80	412	495	235	172	288	4xM10
132MA	200	165	130	38	80	436	519	235	172	288	4xM10
132MB	200	165	130	38	80	472	555	235	172	288	4xM10

B5 'D' FLANGE

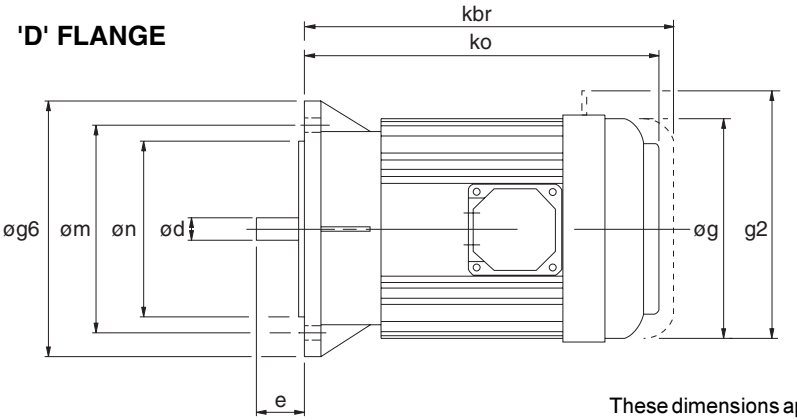

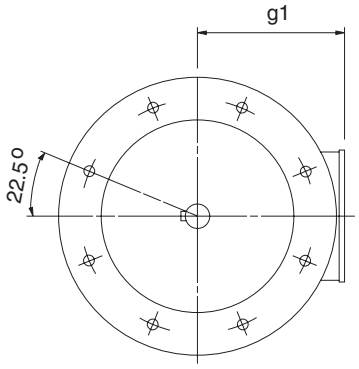

These dimensions apply to Textron Power Transmission standard motors

MOTOR FRAME SIZE	øg6	øm	øn	ød	e	ko	kbr	øg	g1	g2	FIXING BOLTS
63	140	115	95	11	23	218	263	122	107.5	160	4xM8
71	160	130	110	14	30	220.5	265	138	114	167	4xM8
80A	200	165	130	19	40	238.5	291	157	124.5	190	4xM10
80B	200	165	130	19	40	247.5	300	157	124.5	190	4xM10
90S	200	165	130	24	50	260	312	177	133	218	4xM10
90L	200	165	130	24	50	275	327	177	133	218	4xM10
90LA	200	165	130	24	50	284	336	177	133	218	4xM10
100L	250	215	180	28	60	310	370	197	144	238	4xM12
112M	250	215	180	28	60	325	399	219	155	238	4xM12
112MA	250	215	180	28	60	344	419	219	155	238	4xM12
132SA	300	265	230	38	80	392	475	235	172	288	4xM12
132M	300	265	230	38	80	412	495	235	172	288	4xM12
132MA	300	265	230	38	80	436	519	235	172	288	4xM12
132MB	300	265	230	38	80	472	555	235	172	288	4xM12
160M	350	300	250	42	110	455	538	273	282	323	4xM16
160L	350	300	250	42	110	500	583	273	282	323	4xM16
180M	350	300	250	48	110	557	-	382	307	-	4xM16
180L	350	300	250	48	110	595	-	382	307	-	4xM16
200L	400	350	300	55	110	658	-	420	372	-	4xM16
225S	450	400	350	60	140	671	-	458	427	-	8xM16
225M	450	400	350	60	140	696	-	458	427	-	8xM16
250M	550	500	450	65	140	770.5	-	510	490	-	8xM16
280S	550	500	450	75	140	837	-	576	520	-	8xM16
280M	550	500	450	75	140	888	-	576	520	-	8xM16

ADDITIONAL MOTOR FEATURES - COLUMN 19 ENTRY

Column 19 Entry	Brake Motor	Hand Release on Brake	Forced Ventilation / Constant Blower (TECB)	Thermistors	Special
-					
A	●				
B	●	●			
C			●		
D	●		●		
E	●	●	●		
F				●	
G	●			●	
H	●	●		●	
K			●	●	
L	●		●	●	
M	●	●	●	●	
S					●

Please refer to Textron Power Transmission for details of the following additional motor features

- PGF encoder flange
- Wash down
- Customised brake torque
- Separate brake supply
- Aluminium fan
- Anti Condensation heater
- Bi-metal temperature detectors, Thermostat
- EExEIIT3
- Ex nA II T3
- IP56
- IP65
- Metal fan cover
- Rain cowl
- Separate terminal box
- IP55

ADDITIONAL GEARBOX FEATURES - COLUMN 20 ENTRY

Column 20 Entry	Double Oil Seals	Oil Level Glass	Motorised Backstop		Special
			CW Rotation	CCW Rotation	
-					
A	●				
B		●			
C	●	●			
D			●		
E	●		●		
F		●	●		
G	●	●	●		
H				●	
I	●			●	
J		●		●	
K	●	●		●	
L					●

Please refer to Textron Power Transmission for details of the following additional gearbox features

- Prime paint only
- Wash down
- BISSC compatible
- Special oil (food compatible, bio-degradable, different viscosities etc)

0.12 kW

4 POLE

N2 R/MIN	i	M2 Nm	Fm	N	Unit Designation	Kg	
Output Speed	Ratio	Output Torque	Service Factor	Overhung Load	Column Entry 1 Through 20 Spaces to be filled when entering order	Weight of base mount unit	Motor Size
363	3.75	3	19.46	1690	M 0 1 2 2 3 . 6 _ M _ - _ _ . 1 2 A - -	13.5	63
268	5.07	4	16.34	1790	5 . 0		
236	5.76	4	15.24	1840	5 . 6		
208	6.53	5	14.07	1880	6 . 3		
163	8.35	6	11.65	1900	8 . 0		
151	9	7	10.94	1900	9 . 0		
120	11.36	9	9.07	1900	1 1 .		
106	12.88	10	8.29	1900	1 2 .		
92	14.71	11	7.48	1900	1 4 .		
83	16.37	13	6.75	1900	1 6 .		
75	18.05	14	6.11	1900	1 8 .		
68	19.86	16	5.56	1900	2 0 .		
58	23.27	18	4.74	1900	2 2 .		
49	27.92	22	3.96	1900	2 8 .		
42	32.54	26	3.41	1900	3 2 .		
38	36.16	29	3.07	1900	3 6 .		
31	43.54	35	2.38	1900	4 5 .		
27	49.91	40	1.78	1900	5 0 .		
24	56.72	45	1.54	1900	5 6 .		
23	58.46	46	1.93	1900	M 0 1 3 2 5 6 . _ M _ - _ _ . 1 2 A - -	14.5	63
21	64.45	51	1.75	1900	6 3 .		
19	70.93	56	1.59	1900	7 1 .		
16	83.1	66	1.36	1900	8 0 .		
14	99.7	79	1.13	1830	1 0 0		
12	116.22	92	0.97	1650	1 1 2		
11	129.13	102	0.88	1360	1 2 5		
25	53.54	43	3.69	4000	M 0 2 2 2 5 6 . _ M _ - _ _ . 1 2 A - -	16.5	63
24	57.03	45	3.5	4000	M 0 2 3 2 5 6 . _ M _ - _ _ . 1 2 A - -	17.5	63
22	62.87	50	3.17	4000	6 3 .		
20	69.19	55	2.88	4000	7 1 .		
17	81.07	64	2.46	4000	8 0 .		
14	97.26	77	2.06	4000	1 0 0		
12	113.37	90	1.77	4000	1 1 2		
11	125.97	100	1.59	4000	1 2 5		
9	151.69	121	1.32	4000	1 6 0		
7.8	173.87	139	1.15	4000	1 8 0		
6.9	197.6	157	1.02	4000	2 0 0		
20	69.19	55	3.77	4000	M 0 3 3 2 7 1 . _ M _ - _ _ . 1 2 A - -	17.5	63
17	81.07	64	3.22	4000	8 0 .		
14	97.26	77	2.69	4000	1 0 0		
12	113.37	90	2.31	4000	1 1 2		
11	125.97	100	2.08	4000	1 2 5		
9	151.69	121	1.72	4000	1 6 0		
7.8	173.87	138	1.51	4000	1 8 0		
6.9	197.6	157	1.33	4000	2 0 0		
5.8	234.96	182	1.15	3026	M 0 3 4 2 2 2 5 _ M _ - _ _ . 1 2 A - -	26.5	63
5.2	261.37	202	1.03	3026	2 5 0		
4.7	287.83	222	0.94	3026	2 8 0		
4.3	317.33	245	0.85	3026	3 0 0		
12	115.82	92	3.64	7200	M 0 4 3 2 1 1 2 _ M _ - _ _ . 1 2 A - -	26.5	63
10	130.5	104	3.24	7200	1 2 5		
9	151.71	121	2.78	7200	1 6 0		
7.9	172.19	137	2.45	7200	1 8 0		
6.9	195.75	156	2.16	7200	2 0 0		
380	3.58	2	16.34	2040	M 0 5 1 2 3 . 6 _ M _ - _ _ . 1 2 A - -	12.5	63
345	3.94	3	14.93	2070	4 . 0		
300	4.53	3	13.44	2120	4 . 5		
276	4.93	4	11.88	2150	5 . 0		
230	5.92	4	10.47	2220	6 . 0		
192	7.1	5	8.75	2230	7 . 1		
170	8	6	7.82	2230	8 . 0		
9	151.71	121	3.7	7200	M 0 5 3 2 1 6 0 _ M _ - _ _ . 1 2 A - -	27.5	63
7.9	172.19	138	3.26	7200	1 8 0		
6.9	195.75	156	2.87	7200	2 0 0		
6.4	213.18	171	3.66	7200	M 0 6 3 2 2 0 0 _ M _ - _ _ . 1 2 A - -	32.5	63

NOTE

Other output speeds are available using 2 and 8 pole motors - Consult Textron Power Transmission

0205

0.12 kW

6 POLE

N2 R/MIN	i	M2 Nm	Fm	N	Unit Designation	Kg	
Output Speed	Ratio	Output Torque	Service Factor	Overhung Load	Column Entry 1 Through 20 Spaces to be filled when entering order	Weight of base mount unit	Motor Size
232	3.75	4	14.27	1810	M 0 1 2 2 3 . 6 _ M _ - _ _ . 1 2 C - -	13.5	63
172	5.07	6	11.71	1900	5 . 0		
151	5.76	7	10.65	1900	5 . 6		
133	6.53	8	9.59	1900	6 . 3		
104	8.35	10	8.01	1900	8 . 0		
97	9	11	7.54	1900	9 . 0		
77	11.36	14	6.19	1900	1 1 .		
68	12.88	16	5.47	1900	1 2 .		
59	14.71	18	4.79	1900	1 4 .		
53	16.37	20	4.31	1900	1 6 .		
48	18.05	22	3.9	1900	1 8 .		
44	19.86	25	3.55	1900	2 0 .		
37	23.27	29	3.04	1900	2 2 .		
31	27.92	35	2.54	1900	2 8 .		
27	32.54	41	2.17	1900	3 2 .		
24	36.16	45	1.96	1900	3 6 .		
20	43.54	55	1.52	1900	4 5 .		
17	49.91	63	1.14	1900	5 0 .		
15	56.72	71	0.99	1900	5 6 .		
15	58.46	72	1.23	1900	M 0 1 3 2 5 6 . _ M _ - _ _ . 1 2 C - -	14.5	63
13	64.45	80	1.12	1900	6 3 .		
12	70.93	88	1.01	1900	7 1 .		
10	83.1	103	0.87	1360	8 0 .		
21	41.49	52	3.04	4000	M 0 2 2 2 4 5 . _ M _ - _ _ . 1 2 C - -	16.5	63
18	47.09	59	2.68	4000	5 0 .		
16	53.54	67	2.36	4000	5 6 .		
15	57.03	71	2.24	4000	M 0 2 3 2 5 6 . _ M _ - _ _ . 1 2 C - -	17.5	63
14	62.87	79	2.02	4000	6 3 .		
13	69.19	86	1.84	4000	7 1 .		
11	81.07	101	1.57	4000	8 0 .		
8.9	97.26	121	1.31	4000	1 0 0		
7.7	113.37	142	1.13	4000	1 1 2		
6.9	125.97	156	1.02	4000	1 2 5		
5.7	151.69	189	0.85	3200	1 6 0		
13	69.19	86	2.41	4000	M 0 3 3 2 7 1 . _ M _ - _ _ . 1 2 C - -	17.5	63
11	81.07	101	2.05	4000	8 0 .		
8.9	97.26	121	1.71	4000	1 0 0		
7.7	113.37	141	1.47	4000	1 1 2		
6.9	125.97	157	1.33	4000	1 2 5		
5.7	151.69	189	1.1	3500	1 6 0		
5	173.87	217	0.96	3000	1 8 0		
4.4	197.6	247	0.85	2400	2 0 0		
7.5	115.82	145	2.33	7200	M 0 4 3 2 1 1 2 _ M _ - _ _ . 1 2 C - -	26.5	63
6.7	130.5	163	2.07	7200	1 2 5		
5.7	151.71	190	1.77	7200	1 6 0		
5.1	172.19	215	1.57	7200	1 8 0		
4.4	195.75	244	1.38	7200	2 0 0		
5.7	151.71	190	2.36	7200	M 0 5 3 2 1 6 0 _ M _ - _ _ . 1 2 C - -	27.5	63
5.1	172.19	215	2.08	7200	1 8 0		
4.4	195.75	245	1.84	7200	2 0 0		
4.1	213.18	267	2.34	7200	M 0 6 3 2 2 0 0 _ M _ - _ _ . 1 2 C - -	32.5	63

NOTE

Other output speeds are available using 2 and 8 pole motors - Consult Textron Power Transmission

0205

0.18 kW

4 POLE

N2 R/MIN	i	M2 Nm	Fm	N	Unit Designation	Kg	
Output Speed	Ratio	Output Torque	Service Factor	Overhung Load	Column Entry 1 Through 20 Spaces to be filled when entering order	Weight of base mount unit	Motor Size
365	3.75	4	13.07	1681	M 0 1 2 2 3 . 6 _ M _ - _ _ . 1 8 A - -	13.5	63
270	5.07	6	10.97	1778	5 . 0		
238	5.76	6	10.24	1826	5 . 6		
210	6.53	7	9.45	1856	6 . 3		
164	8.35	10	7.82	1873	8 . 0		
152	9	10	7.35	1872	9 . 0		
121	11.36	13	6.09	1874	1 1 .		
106	12.88	15	5.56	1874	1 2 .		
93	14.71	17	5.02	1854	1 4 .		
84	16.37	19	4.53	1890	1 6 .		
76	18.05	21	4.1	1877	1 8 .		
69	19.86	24	3.73	1852	2 0 .		
59	23.27	28	3.19	1881	2 2 .		
49	27.92	33	2.66	1819	2 8 .		
42	32.54	39	2.29	1878	3 2 .		
38	36.16	43	2.06	1854	3 6 .		
31	43.54	52	1.6	1890	4 5 .		
27	49.91	60	1.2	1849	5 0 .		
24	56.72	68	1.03	1900	5 6 .		
23	58.46	69	1.3	1724	M 0 1 3 2 5 6 . _ M _ - _ _ . 1 8 A - -	14.5	63
21	64.45	76	1.18	1590	6 3 .		
19	70.93	84	1.07	1780	7 1 .		
16	83.1	98	0.91	1450	8 0 .		
38	35.69	43	3.72	4000	M 0 2 2 2 3 6 . _ M _ - _ _ . 1 8 A - -	16.5	63
33	41.49	50	3.19	4000	4 5 .		
29	47.09	56	2.81	4000	5 0 .		
26	53.54	64	2.48	3956	5 6 .		
24	57.03	68	2.35	4000	M 0 2 3 2 5 6 . _ M _ - _ _ . 1 8 A - -	17.5	63
22	62.87	75	2.13	4000	6 3 .		
20	69.19	82	1.94	4000	7 1 .		
17	81.07	96	1.65	3913	8 0 .		
14	97.26	115	1.38	4000	1 0 0		
12	113.37	134	1.19	3976	1 1 2		
11	125.97	149	1.07	4000	1 2 5		
9	151.69	180	0.89	4000	1 6 0		
33	41.49	50	3.96	4000	M 0 3 2 2 4 5 . _ M _ - _ _ . 1 8 A - -	16.5	63
29	47.09	56	3.57	4000	5 0 .		
26	53.54	64	3.19	4000	5 6 .		
24	57.03	68	3.07	4000	M 0 3 3 2 5 6 . _ M _ - _ _ . 1 8 A - -	17.5	63
22	62.87	75	2.78	4000	6 3 .		
20	69.19	82	2.53	3743	7 1 .		
17	81.07	96	2.16	3913	8 0 .		
14	97.26	115	1.81	3654	1 0 0		
12	113.37	134	1.55	3976	1 1 2		
11	125.97	149	1.4	3718	1 2 5		
9	151.69	180	1.15	3173	1 6 0		
7.9	173.87	206	1.01	3420	1 8 0		
6.9	197.6	234	0.89	2660	2 0 0		
19	73.95	88	3.82	7200	M 0 4 3 2 7 1 . _ M _ - _ _ . 1 8 A - -	26.5	63
17	80.4	96	3.51	7200	8 0 .		
14	96.52	115	2.93	7200	1 0 0		
12	115.82	138	2.45	7102	1 1 2		
10	130.5	155	2.17	7200	1 2 5		
9	151.71	180	1.87	7178	1 6 0		
8	172.19	205	1.65	7034	1 8 0		
7	195.75	233	1.45	7200	2 0 0		
5.9	232.81	269	1.25	7125	M 0 4 4 2 2 2 5 _ M _ - _ _ . 1 8 A - -	38.5	63
5.3	260.47	300	1.12	7125	2 5 0		
4.9	277.62	320	1.06	7125	2 8 0		
4.5	305.72	353	0.96	7125	3 0 0		
3.8	362.32	416	0.81	7125	3 6 0		
383	3.58	4	10.97	2027	M 0 5 1 2 3 . 6 _ M _ - _ _ . 1 8 A - -	12.5	63
348	3.94	4	10.03	2054	4 . 0		
302	4.53	5	9.03	2099	4 . 5		
278	4.93	6	7.98	2115	5 . 0		
232	5.92	7	7.03	2175	6 . 0		
193	7.1	8	5.88	2171	7 . 1		
171	8	9	5.25	2178	8 . 0		
14	96.52	115	3.89	7200	M 0 5 3 2 1 0 0 _ M _ - _ _ . 1 8 A - -	27.5	63
12	115.82	138	3.25	7200	1 1 2		
10	130.5	155	2.89	7200	1 2 5		
9	151.71	181	2.48	6660	1 6 0		
8	172.19	205	2.19	6902	1 8 0		
7	195.75	233	1.93	6628	2 0 0		
5.9	232.81	271	1.66	4809	M 0 5 4 2 2 2 5 _ M _ - _ _ . 1 8 A - -	40.5	63
5.3	260.47	302	1.49	4809	2 5 0		
4.9	277.62	322	1.4	4809	2 8 0		
4.5	305.72	355	1.27	4809	3 0 0		
3.8	362.32	419	1.07	4809	3 6 0		
3.3	416.75	482	0.93	4809	4 0 0		
3.1	444.96	514	0.87	4809	4 5 0		
2.8	483.76	559	0.8	4809	5 0 0		
8.5	161.57	192	3.24	7200	M 0 6 3 2 1 6 0 _ M _ - _ _ . 1 8 A - -	32.5	63
7.3	187.83	224	2.79	7200	1 8 0		
6.4	213.18	254	2.46	7200	2 0 0		
6.4	215.23	252	2.48	7200	M 0 6 4 2 2 2 5 _ M _ - _ _ . 1 8 A - -	45.5	63
5.8	237.02	278	2.25	7200	2 5 0		
5	272.91	318	1.66	7200	2 8 0		
4.4	313.91	366	1.44	7200	3 0 0		
3.8	365.1	426	1.4	7200	3 6 0		
3.5	396.93	463	1.29	7200	4 0 0		
3.1	444.1	516	1.21	7200	4 5 0		
2.6	533.13	620	1.01	7200	5 0 0		
2.4	568.23	661	0.95	7200	6 5 0		
6	229	268	3.24	4677	M 0 7 4 2 2 2 5 _ M _ - _ _ . 1 8 A - -	52.5	63
5.3	259.68	303	2.86	4676	2 5 0		
4.8	286.42	334	2.59	4676	2 8 0		
4.3	315.41	368	2.35	4676	3 0 0		
3.8	361.21	421	2.06	4675	3 6 0		
3.3	415.49	484	1.79	4675	4 0 0		
2.9	469.77	546	1.59	4675	4 5 0		
2.7	510.72	594	1.46	4675	5 0 0		
2.3	592.12	687	1.26	4675	6 5 0		
1.9	710.84	824	1.05	4675	7 3 0		
1.6	847.84	979	0.89	4674	8 6 0		

NOTE

Other output speeds are available using 2 and 8 pole motors - Consult Textron Power Transmission

0205

0.18 kW

6 POLE

N2 R/MIN	i	M2 Nm	Fm	N	Unit Designation	Kg	
Output Speed	Ratio	Output Torque	Service Factor	Overhung Load	Column Entry 1 Through 20 Spaces to be filled when entering order	Weight of base mount unit	Motor Size
240	3.75	6	9.84	1791	M 0 1 2 2 3 . 6 _ M _ - _ _ . 1 8 C - -	14.5	71
178	5.07	9	8.07	1874	5 . 0		
156	5.76	10	7.34	1874	5 . 6		
138	6.53	12	6.61	1874	6 . 3		
108	8.35	15	5.52	1874	8 . 0		
100	9	16	5.2	1868	9 . 0		
79	11.36	21	4.27	1822	1 1 .		
70	12.88	23	3.77	1792	1 2 .		
61	14.71	27	3.3	1783	1 4 .		
55	16.37	30	2.97	1786	1 6 .		
50	18.05	33	2.69	1750	1 8 .		
45	19.86	36	2.45	1719	2 0 .		
39	23.27	42	2.09	1712	2 2 .		
32	27.92	51	1.75	1634	2 8 .		
28	32.54	59	1.5	1631	3 2 .		
25	36.16	66	1.35	1540	3 6 .		
21	43.54	80	1.05	1496	4 5 .		
15	58.46	105	0.85	730	M 0 1 3 2 5 6 . _ M _ - _ _ . 1 8 C - -	15.5	71
34	26.4	48	3.29	4000	M 0 2 2 2 2 8 . _ M _ - _ _ . 1 8 C - -	18.5	71
28	31.68	58	2.74	4000	3 2 .		
25	35.69	65	2.44	4000	3 6 .		
22	41.49	76	2.09	3824	4 5 .		
19	47.09	86	1.85	3706	5 0 .		
17	53.54	98	1.63	3571	5 6 .		
16	57.03	103	1.54	3829	M 0 2 3 2 5 6 . _ M _ - _ _ . 1 8 C - -	19.5	71
14	62.87	114	1.4	3685	6 3 .		
13	69.19	125	1.27	3532	7 1 .		
11	81.07	147	1.08	3243	8 0 .		
9.3	97.26	176	0.91	3270	1 0 0		
28	31.68	58	3.58	4000	M 0 3 2 2 3 2 . _ M _ - _ _ . 1 8 C - -	18.5	71
25	35.69	65	3.19	4000	3 6 .		
22	41.49	76	2.69	4000	4 5 .		
19	47.09	86	2.41	4000	5 0 .		
17	53.54	98	2.09	4000	5 6 .		
16	57.03	103	2.02	4000	M 0 3 3 2 5 6 . _ M _ - _ _ . 1 8 C - -	19.5	71
14	62.87	114	1.82	4000	6 3 .		
13	69.19	125	1.66	3441	7 1 .		
11	81.07	147	1.42	3243	8 0 .		
9.3	97.26	176	1.18	3039	1 0 0		
7.9	113.37	205	1.02	2493	1 1 2		
7.1	125.97	228	0.92	1766	1 2 5		
15	58.38	106	3.17	7200	M 0 4 3 2 5 6 . _ M _ - _ _ . 1 8 C - -	28.5	71
14	64.29	117	2.88	7200	6 3 .		
12	73.95	134	2.51	7200	7 1 .		
11	80.4	146	2.31	7200	8 0 .		
9.3	96.52	175	1.92	7200	1 0 0		
7.8	115.82	210	1.6	6442	1 1 2		
6.9	130.5	236	1.43	6712	1 2 5		
5.9	151.71	276	1.22	6295	1 6 0		
5.2	172.19	312	1.08	5901	1 8 0		
4.6	195.75	354	0.95	6203	2 0 0		
3.9	232.81	412	0.82	7125	M 0 4 4 2 2 2 5 _ M _ - _ _ . 1 8 C - -	40.5	71
251	3.58	6	7.29	2160	M 0 5 1 2 3 . 6 _ M _ - _ _ . 1 8 C - -	14.5	71
228	3.94	7	6.61	2180	4 . 0		
199	4.53	8	6.04	2230	4 . 5		
183	4.93	9	5.26	2230	5 . 0		
152	5.92	11	4.61	2230	6 . 0		
127	7.1	13	3.88	2230	7 . 1		
113	8	14	3.45	2230	8 . 0		
12	73.95	135	3.33	7200	M 0 5 3 2 7 1 . _ M _ - _ _ . 1 8 C - -	28.5	71
11	80.4	146	3.06	7200	8 0 .		
9.3	96.52	175	2.56	7200	1 0 0		
7.8	115.82	210	2.14	7200	1 1 2		
6.9	130.5	237	1.9	7200	1 2 5		
5.9	151.71	276	1.63	6195	1 6 0		
5.2	172.19	313	1.44	5820	1 8 0		
4.6	195.75	355	1.27	5274	2 0 0		
3.9	232.81	413	1.09	4809	M 0 5 4 2 2 2 5 _ M _ - _ _ . 1 8 C - -	41.5	71
3.5	260.47	461	0.97	4809	2 5 0		
3.2	277.62	492	0.91	4809	2 8 0		
2.9	305.72	542	0.83	4809	3 0 0		
7.5	119.5	218	2.87	7200	M 0 6 3 2 1 1 2 _ M _ - _ _ . 1 8 C - -	33.5	71
6.3	143.39	261	2.4	7200	1 2 5		
5.6	161.57	293	2.13	7200	1 6 0		
4.8	187.83	342	1.83	7200	1 8 0		
4.2	213.18	387	1.61	6215	2 0 0		
4.2	215.23	384	1.62	7200	M 0 6 4 2 2 2 5 _ M _ - _ _ . 1 8 C - -	47.5	71
3.8	237.02	423	1.47	7200	2 5 0		
3.3	272.91	486	1.09	7200	2 8 0		
2.9	313.91	558	0.95	7200	3 0 0		
2.5	365.1	649	0.92	7200	3 6 0		
2.3	396.93	706	0.85	7200	4 0 0		
3.9	229	408	2.12	4677	M 0 7 4 2 2 2 5 _ M _ - _ _ . 1 8 C - -	54.5	71
3.5	259.68	462	1.88	4676	2 5 0		
3.1	286.42	510	1.7	4676	2 8 0		
2.9	315.41	562	1.54	4676	3 0 0		
2.5	361.21	642	1.35	4675	3 6 0		
2.2	415.49	738	1.17	4675	4 0 0		
1.9	469.77	833	1.04	4675	4 5 0		
1.8	510.72	906	0.96	4675	5 0 0		
1.5	592.12	1048	0.83	4675	6 5 0		

NOTE

Other output speeds are available using 2 and 8 pole motors - Consult Textron Power Transmission

0205

0.25 kW

4 POLE

N2 R/MIN Output Speed	i Ratio	M2 Nm Output Torque	Fm Service Factor	N Overhung Load	Unit Designation Column Entry 1 Through 20 Spaces to be filled when entering order	Kg Weight of base mount unit	Motor Size
373	3.75	6	9.62	1670	M 0 1 2 2 3 . 6 _ M _ - _ _ . 2 5 A - -	14.5	71
276	5.07	8	8.07	1764	5 . 0		
243	5.76	9	7.53	1810	5 . 6		
214	6.53	10	6.95	1829	6 . 3		
168	8.35	13	5.75	1841	8 . 0		
156	9	14	5.41	1840	9 . 0		
123	11.36	18	4.48	1845	1 1 .		
109	12.88	21	4.09	1845	1 2 .		
95	14.71	24	3.7	1800	1 4 .		
86	16.37	26	3.33	1879	1 6 .		
78	18.05	29	3.02	1850	1 8 .		
70	19.86	32	2.75	1796	2 0 .		
60	23.27	38	2.34	1860	2 2 .		
50	27.92	45	1.96	1724	2 8 .		
43	32.54	53	1.68	1853	3 2 .		
39	36.16	59	1.52	1801	3 6 .		
32	43.54	71	1.17	1880	4 5 .		
28	49.91	81	0.88	1790	5 0 .		
24	58.46	94	0.95	1520	M 0 1 3 2 5 6 . _ M _ - _ _ . 2 5 A - -	15.5	71
22	64.45	103	0.87	1230	6 3 .		
53	26.4	43	3.68	4000	M 0 2 2 2 2 8 . _ M _ - _ _ . 2 5 A - -	18.5	71
44	31.68	52	3.07	4000	3 2 .		
39	35.69	58	2.73	4000	3 6 .		
34	41.49	68	2.35	4000	4 5 .		
30	47.09	77	2.07	4000	5 0 .		
26	53.54	87	1.82	3906	5 6 .		
25	57.03	92	1.73	4000	M 0 2 3 2 5 6 . _ M _ - _ _ . 2 5 A - -	19.5	71
22	62.87	102	1.57	4000	6 3 .		
20	69.19	112	1.43	4000	7 1 .		
17	81.07	131	1.22	3812	8 0 .		
14	97.26	157	1.02	4000	1 0 0		
12	113.37	183	0.87	3950	1 1 2		
39	35.69	58	3.57	3837	M 0 3 2 2 3 6 . _ M _ - _ _ . 2 5 A - -	18.5	71
34	41.49	68	2.91	3921	4 5 .		
30	47.09	77	2.63	3828	5 0 .		
26	53.54	87	2.34	3941	5 6 .		
25	57.03	92	2.26	3884	M 0 3 3 2 5 6 . _ M _ - _ _ . 2 5 A - -	19.5	71
22	62.87	102	2.05	3772	6 3 .		
20	69.19	112	1.86	3443	7 1 .		
17	81.07	131	1.59	3812	8 0 .		
14	97.26	157	1.33	3251	1 0 0		
12	113.37	183	1.14	3950	1 1 2		
11	125.97	203	1.03	3390	1 2 5		
9.2	151.69	245	0.85	2209	1 6 0		
24	58.38	94	3.56	7200	M 0 4 3 2 5 6 . _ M _ - _ _ . 2 5 A - -	28.5	71
22	64.29	104	3.23	7200	6 3 .		
19	73.95	120	2.81	7191	7 1 .		
17	80.4	130	2.58	7171	8 0 .		
15	96.52	156	2.16	7200	1 0 0		
12	115.82	187	1.8	6988	1 1 2		
11	130.5	211	1.6	7200	1 2 5		
9.2	151.71	245	1.37	7153	1 6 0		
8.1	172.19	278	1.21	6841	1 8 0		
7.2	195.75	317	1.07	7200	2 0 0		
6	232.81	366	0.92	7125	M 0 4 4 2 2 2 5 _ M _ - _ _ . 2 5 A - -	40.5	71
5.4	260.47	408	0.83	7125	2 5 0		
391	3.58	6	8.07	2011	M 0 5 1 2 3 . 6 _ M _ - _ _ . 2 5 A - -	14.5	71
355	3.94	6	7.38	2035	4 . 0		
309	4.53	7	6.64	2076	4 . 5		
284	4.93	8	5.87	2075	5 . 0		
237	5.92	9	5.18	2122	6 . 0		
197	7.1	11	4.33	2103	7 . 1		
175	8	13	3.86	2118	8 . 0		
19	73.95	120	3.73	7200	M 0 5 3 2 7 1 . _ M _ - _ _ . 2 5 A - -	28.5	71
17	80.4	131	3.43	7200	8 0 .		
15	96.52	157	2.87	6902	1 0 0		
12	115.82	188	2.39	6965	1 1 2		
11	130.5	211	2.12	6764	1 2 5		
9.2	151.71	246	1.83	6030	1 6 0		
8.1	172.19	279	1.61	6555	1 8 0		
7.2	195.75	317	1.42	5962	2 0 0		
6	232.81	368	1.22	4809	M 0 5 4 2 2 2 5 _ M _ - _ _ . 2 5 A - -	41.5	71
5.4	260.47	411	1.09	4809	2 5 0		
5	277.62	438	1.03	4809	2 8 0		
4.6	305.72	483	0.93	4809	3 0 0		
14	99.54	162	3.86	7200	M 0 6 3 2 1 0 0 _ M _ - _ _ . 2 5 A - -	33.5	71
12	119.5	194	3.22	7200	1 1 2		
10	143.39	232	2.69	7200	1 2 5		
8.7	161.57	262	2.39	7200	1 6 0		
7.5	187.83	305	2.05	7200	1 8 0		
6.6	213.18	346	1.81	7200	2 0 0		
6.5	215.23	342	1.82	7200	M 0 6 4 2 2 2 5 _ M _ - _ _ . 2 5 A - -	47.5	71
5.9	237.02	377	1.65	7200	2 5 0		
5.1	272.91	433	1.22	7200	2 8 0		
4.5	313.91	498	1.06	7200	3 0 0		
3.8	365.1	579	1.03	7200	3 6 0		
3.5	396.93	629	0.95	7200	4 0 0		
3.2	444.1	702	0.89	7200	4 5 0		
6.1	229	364	2.38	4677	M 0 7 4 2 2 2 5 _ M _ - _ _ . 2 5 A - -	54.5	71
5.4	259.68	412	2.1	4676	2 5 0		
4.9	286.42	454	1.91	4676	2 8 0		
4.4	315.41	501	1.73	4676	3 0 0		
3.9	361.21	572	1.51	4675	3 6 0		
3.4	415.49	658	1.32	4675	4 0 0		
3	469.77	743	1.17	4675	4 5 0		
2.7	510.72	807	1.07	4675	5 0 0		
2.4	592.12	934	0.93	4675	6 5 0		

NOTE

Other output speeds are available using 2 and 8 pole motors - Consult Textron Power Transmission

0205

0.25 kW

6 POLE

N2 R/MIN Output Speed	i Ratio	M2 Nm Output Torque	Fm Service Factor	N Overhung Load	Unit Designation Column Entry 1 Through 20 Spaces to be filled when entering order	Kg Weight of base mount unit	Motor Size
240	3.75	9	7.09	1768	M 0 1 2 2 3 . 6 _ M _ - _ _ . 2 5 C - -	14.5	71
178	5.07	13	5.81	1845	5 . 0		
156	5.76	14	5.29	1844	5 . 6		
138	6.53	16	4.76	1845	6 . 3		
108	8.35	21	3.97	1845	8 . 0		
100	9	23	3.75	1831	9 . 0		
79	11.36	29	3.08	1731	1 1 .		
70	12.88	33	2.71	1666	1 2 .		
61	14.71	37	2.38	1647	1 4 .		
55	16.37	41	2.14	1653	1 6 .		
50	18.05	46	1.94	1576	1 8 .		
45	19.86	50	1.76	1507	2 0 .		
39	23.27	59	1.51	1493	2 2 .		
32	27.92	71	1.26	1325	2 8 .		
28	32.54	83	1.08	1319	3 2 .		
25	36.16	92	0.97	1121	3 6 .		
44	20.23	51	3.08	4000	M 0 2 2 2 2 0 . _ M _ - _ _ . 2 5 C - -	18.5	71
41	21.99	56	2.84	4000	2 2 .		
34	26.4	67	2.37	3771	2 8 .		
28	31.68	80	1.98	3813	3 2 .		
25	35.69	91	1.75	3712	3 6 .		
22	41.49	106	1.51	3619	4 5 .		
19	47.09	120	1.33	3365	5 0 .		
17	53.54	136	1.17	3071	5 6 .		
16	57.03	144	1.11	3630	M 0 2 3 2 5 6 . _ M _ - _ _ . 2 5 C - -	19.5	71
14	62.87	159	1	3318	6 3 .		
13	69.19	174	0.92	2986	7 1 .		
41	21.99	56	3.7	3873	M 0 3 2 2 2 2 . _ M _ - _ _ . 2 5 C - -	18.5	71
34	26.4	67	3.09	3771	2 8 .		
28	31.68	81	2.58	3695	3 2 .		
25	35.69	91	2.3	3695	3 6 .		
22	41.49	106	1.94	3562	4 5 .		
19	47.09	120	1.73	3508	5 0 .		
17	53.54	136	1.51	3419	5 6 .		
16	57.03	144	1.45	3331	M 0 3 3 2 5 6 . _ M _ - _ _ . 2 5 C - -	19.5	71
14	62.87	159	1.31	3243	6 3 .		
13	69.19	174	1.2	2790	7 1 .		
11	81.07	204	1.02	2359	8 0 .		
9.3	97.26	245	0.85	1920	1 0 0		
15	58.38	148	2.28	6774	M 0 4 3 2 5 6 . _ M _ - _ _ . 2 5 C - -	28.5	71
14	64.29	162	2.07	6944	6 3 .		
12	73.95	187	1.8	6749	7 1 .		
11	80.4	203	1.66	6620	8 0 .		
9.3	96.52	244	1.38	6609	1 0 0		
7.8	115.82	292	1.15	5558	1 1 2		
6.9	130.5	328	1.03	6144	1 2 5		
5.9	151.71	383	0.88	5239	1 6 0		
251	3.58	9	5.25	2125	M 0 5 1 2 3 . 6 _ M _ - _ _ . 2 5 C - -	14.5	71
228	3.94	10	4.76	2136	4 . 0		
199	4.53	11	4.35	2174	4 . 5		
183	4.93	12	3.79	2169	5 . 0		
152	5.92	15	3.32	2155	6 . 0		
127	7.1	18	2.79	2134	7 . 1		
113	8	20	2.48	2122	8 . 0		
15	58.38	148	3.04	7200	M 0 5 3 2 5 6 . _ M _ - _ _ . 2 5 C - -	28.5	71
14	64.29	163	2.76	7200	6 3 .		
12	73.95	187	2.4	6652	7 1 .		
11	80.4	204	2.2	6594	8 0 .		
9.3	96.52	244	1.84	6315	1 0 0		
7.8	115.82	292	1.54	6146	1 1 2		
6.9	130.5	329	1.37	5841	1 2 5		
5.9	151.71	383	1.17	5023	1 6 0		
5.2	172.19	434	1.03	4280	1 8 0		
4.6	195.75	493	0.91	3331	2 0 0		
12	72.28	183	3.41	7200	M 0 6 3 2 6 3 . _ M _ - _ _ . 2 5 C - -	33.5	71
11	79.6	202	3.09	7200	7 1 .		
10	91.56	232	2.69	7200	8 0 .		
9	99.54	252	2.48	7200	1 0 0		
7.5	119.5	302	2.07	6988	1 1 2		
6.3	143.39	362	1.73	6562	1 2 5		
5.6	161.57	408	1.53	6914	1 6 0		
4.8	187.83	475	1.32	6375	1 8 0		
4.2	213.18	538	1.16	5067	2 0 0		
4.2	215.23	534	1.17	7200	M 0 6 4 2 2 2 5 _ M _ - _ _ . 2 5 C - -	47.5	71
3.8	237.02	588	1.06	7200	2 5 0		
3.9	229	567	1.53	4677	M 0 7 4 2 2 2 5 _ M _ - _ _ . 2 5 C - -	54.5	71
3.5	259.68	642	1.35	4676	2 5 0		
3.1	286.42	708	1.22	4676	2 8 0		
2.9	315.41	780	1.11	4676	3 0 0		
2.5	361.21	892	0.97	4675	3 6 0		
2.2	415.49	1026	0.85	4675	4 0 0		

NOTE

Other output speeds are available using 2 and 8 pole motors - Consult Textron Power Transmission

0205

0.37 kW

4 POLE

N2 R/MIN Output Speed	i Ratio	M2 Nm Output Torque	Fm Service Factor	N Overhung Load	Unit Designation Column Entry 1 Through 20 Spaces to be filled when entering order	Kg Weight of base mount unit	Motor Size
373	3.75	9	6.5	1652	M 0 1 2 2 3 . 6 _ M _ - _ _ . 3 7 A - -	14.5	71
276	5.07	12	5.45	1740	5 . 0		
243	5.76	14	5.09	1782	5 . 6		
214	6.53	15	4.7	1782	6 . 3		
168	8.35	20	3.89	1787	8 . 0		
156	9	22	3.65	1785	9 . 0		
123	11.36	27	3.03	1795	1 1 .		
109	12.88	31	2.77	1795	1 2 .		
95	14.71	35	2.5	1708	1 4 .		
86	16.37	39	2.25	1860	1 6 .		
78	18.05	43	2.04	1804	1 8 .		
70	19.86	48	1.86	1701	2 0 .		
60	23.27	56	1.58	1824	2 2 .		
50	27.92	67	1.32	1562	2 8 .		
43	32.54	78	1.14	1810	3 2 .		
39	36.16	87	1.03	1710	3 6 .		
80	17.58	42	3.73	4000	M 0 2 2 2 1 8 . _ M _ - _ _ . 3 7 A - -	18.5	71
69	20.23	49	3.24	4000	2 0 .		
64	21.99	53	2.97	4000	2 2 .		
53	26.4	64	2.49	3963	2 8 .		
44	31.68	77	2.08	4000	3 2 .		
39	35.69	86	1.85	4000	3 6 .		
34	41.49	100	1.59	4000	4 5 .		
30	47.09	114	1.4	4000	5 0 .		
26	53.54	129	1.23	3819	5 6 .		
25	57.03	136	1.17	4000	M 0 2 3 2 5 6 . _ M _ - _ _ . 3 7 A - -	19.5	71
22	62.87	151	1.06	4000	6 3 .		
20	69.19	166	0.96	4000	7 1 .		
17	81.07	194	0.82	3640	8 0 .		
64	21.99	53	3.89	3856	M 0 3 2 2 2 2 . _ M _ - _ _ . 3 7 A - -	18.5	71
53	26.4	64	3.26	3681	2 8 .		
44	31.68	77	2.71	3727	3 2 .		
39	35.69	86	2.41	3560	3 6 .		
34	41.49	101	1.97	3786	4 5 .		
30	47.09	114	1.77	3533	5 0 .		
26	53.54	130	1.58	3840	5 6 .		
25	57.03	136	1.53	3686	M 0 3 3 2 5 6 . _ M _ - _ _ . 3 7 A - -	19.5	71
22	62.87	151	1.38	3383	6 3 .		
20	69.19	166	1.26	2930	7 1 .		
17	81.07	194	1.08	3640	8 0 .		
14	97.26	232	0.9	2560	1 0 0		
24	58.38	140	2.41	7087	M 0 4 3 2 5 6 . _ M _ - _ _ . 3 7 A - -	28.5	71
22	64.29	154	2.18	7200	6 3 .		
19	73.95	178	1.9	7176	7 1 .		
17	80.4	193	1.75	7123	8 0 .		
15	96.52	232	1.46	7200	1 0 0		
12	115.82	277	1.22	6793	1 1 2		
11	130.5	312	1.08	7200	1 2 5		
9.2	151.71	363	0.93	7110	1 6 0		
8.1	172.19	412	0.82	6510	1 8 0		
391	3.58	8	5.45	1985	M 0 5 1 2 3 . 6 _ M _ - _ _ . 3 7 A - -	14.5	71
355	3.94	9	4.98	2003	4 . 0		
309	4.53	11	4.49	2035	4 . 5		
284	4.93	12	3.97	2006	5 . 0		
237	5.92	14	3.5	2033	6 . 0		
197	7.1	17	2.92	1987	7 . 1		
175	8	19	2.61	2015	8 . 0		
24	58.38	141	3.18	7200	M 0 5 3 2 5 6 . _ M _ - _ _ . 3 7 A - -	28.5	71
22	64.29	155	2.9	7200	6 3 .		
19	73.95	178	2.52	6687	7 1 .		
17	80.4	193	2.32	7005	8 0 .		
15	96.52	232	1.94	6393	1 0 0		
12	115.82	278	1.62	6563	1 1 2		
11	130.5	313	1.44	6018	1 2 5		
9.2	151.71	364	1.23	4950	1 6 0		
8.1	172.19	413	1.09	5960	1 8 0		
7.2	195.75	469	0.96	4820	2 0 0		
6	232.81	545	0.82	4809	M 0 5 4 2 2 2 5 _ M _ - _ _ . 3 7 A - -	41.5	71
19	72.28	173	3.6	7200	M 0 6 3 2 6 3 . _ M _ - _ _ . 3 7 A - -	33.5	71
18	79.6	192	3.24	7200	7 1 .		
15	91.56	220	2.84	7200	8 0 .		
14	99.54	240	2.61	7200	1 0 0		
12	119.5	287	2.17	7200	1 1 2		
10	143.39	344	1.82	7200	1 2 5		
8.7	161.57	388	1.61	7200	1 6 0		
7.5	187.83	451	1.39	7200	1 8 0		
6.6	213.18	512	1.22	7200	2 0 0		
6.5	215.23	507	1.23	7200	M 0 6 4 2 2 2 5 _ M _ - _ _ . 3 7 A - -	47.5	71
5.9	237.02	559	1.12	7200	2 5 0		
5.1	272.91	641	0.82	7200	2 8 0		
6.1	229	539	1.61	4677	M 0 7 4 2 2 2 5 _ M _ - _ _ . 3 7 A - -	54.5	71
5.4	259.68	610	1.42	4676	2 5 0		
4.9	286.42	672	1.29	4676	2 8 0		
4.4	315.41	741	1.17	4676	3 0 0		
3.9	361.21	847	1.02	4675	3 6 0		
3.4	415.49	974	0.89	4675	4 0 0		

NOTE

Other output speeds are available using 2 and 8 pole motors - Consult Textron Power Transmission

0205

0.37 kW

6 POLE

N2 R/MIN	i	M2 Nm	Fm	N	Unit Designation	Kg	
Output Speed	Ratio	Output Torque	Service Factor	Overhung Load	Column Entry 1 Through 20 Spaces to be filled when entering order	Weight of base mount unit	Motor Size
245	3.75	13	4.9	1730	M 0 1 2 2 3 . 6 _ M _ - _ _ . 3 7 C - -	18.5	80A
182	5.07	18	4.01	1795	5 . 0		
160	5.76	21	3.65	1792	5 . 6		
141	6.53	24	3.29	1795	6 . 3		
110	8.35	30	2.75	1795	8 . 0		
102	9	33	2.59	1767	9 . 0		
81	11.36	42	2.12	1575	1 1 .		
71	12.88	47	1.88	1451	1 2 .		
63	14.71	54	1.64	1415	1 4 .		
56	16.37	60	1.48	1425	1 6 .		
51	18.05	66	1.34	1278	1 8 .		
46	19.86	73	1.22	1146	2 0 .		
40	23.27	86	1.04	1117	2 2 .		
33	27.92	103	0.87	795	2 8 .		
74	12.37	46	3.47	4000	M 0 2 2 2 1 2 . _ M _ - _ _ . 3 7 C - -	22.5	80A
65	14.05	52	3.06	4000	1 4 .		
58	15.97	59	2.69	4000	1 6 .		
52	17.58	65	2.45	4000	1 8 .		
45	20.23	75	2.13	3841	2 0 .		
42	21.99	81	1.96	3765	2 2 .		
35	26.4	97	1.63	3380	2 8 .		
29	31.68	117	1.36	3493	3 2 .		
26	35.69	131	1.21	3220	3 6 .		
22	41.49	153	1.04	3267	4 5 .		
20	47.09	174	0.92	2779	5 0 .		
17	53.54	197	0.81	2215	5 6 .		
58	15.97	59	3.52	4000	M 0 3 2 2 1 6 . _ M _ - _ _ . 3 7 C - -	22.5	80A
52	17.58	65	3.19	3933	1 8 .		
45	20.23	75	2.77	3768	2 0 .		
42	21.99	81	2.56	3657	2 2 .		
35	26.4	97	2.13	3380	2 8 .		
29	31.68	117	1.78	3173	3 2 .		
26	35.69	131	1.59	3173	3 6 .		
22	41.49	153	1.34	2812	4 5 .		
20	47.09	173	1.2	2666	5 0 .		
17	53.54	197	1.04	2423	5 6 .		
16	57.03	208	1	2186	M 0 3 3 2 5 6 . _ M _ - _ _ . 3 7 C - -	23.5	80A
15	62.87	230	0.91	1945	6 3 .		
13	69.19	252	0.83	1674	7 1 .		
34	27.3	101	3.34	7200	M 0 4 2 2 2 8 . _ M _ - _ _ . 3 7 C - -	30.5	80A
29	32.19	119	2.82	7200	3 2 .		
26	35.25	130	2.58	7200	3 6 .		
21	43.2	159	2.11	7200	4 5 .		
19	48.15	178	1.9	7200	5 0 .		
17	54	199	1.35	7200	5 6 .		
16	58.38	214	1.58	6045	M 0 4 3 2 5 6 . _ M _ - _ _ . 3 7 C - -	32.5	80A
14	64.29	235	1.43	6506	6 3 .		
12	73.95	271	1.25	5976	7 1 .		
11	80.4	294	1.15	5626	8 0 .		
10	96.52	353	0.96	5597	1 0 0		
257	3.58	13	3.63	2067	M 0 5 1 2 3 . 6 _ M _ - _ _ . 3 7 C - -	17.5	80A
233	3.94	14	3.29	2062	4 . 0		
203	4.53	17	3	2079	4 . 5		
187	4.93	18	2.62	2064	5 . 0		
155	5.92	22	2.29	2027	6 . 0		
130	7.1	26	1.93	1972	7 . 1		
115	8	30	1.71	1938	8 . 0		
29	32.19	119	3.76	7200	M 0 5 2 2 3 2 . _ M _ - _ _ . 3 7 C - -	31.5	80A
26	35.25	130	3.44	7200	3 6 .		
21	43.2	160	2.54	7200	4 5 .		
19	48.15	178	2.13	7200	5 0 .		
17	54	199	1.35	7200	5 6 .		
16	58.38	214	2.1	6391	M 0 5 3 2 5 6 . _ M _ - _ _ . 3 7 C - -	32.5	80A
14	64.29	236	1.9	6204	6 3 .		
12	73.95	271	1.66	5713	7 1 .		
11	80.4	295	1.52	5556	8 0 .		
10	96.52	353	1.27	4800	1 0 0		
7.9	115.82	423	1.06	4339	1 1 2		
7	130.5	477	0.94	3513	1 2 5		
6.1	151.71	555	0.81	3013	1 6 0		
117	7.83	29	3.99	3280	M 0 6 1 2 8 . 0 _ M _ - _ _ . 3 7 C - -	22.5	80A
15	59.61	220	2.13	7200	M 0 6 2 2 5 6 . _ M _ - _ _ . 3 7 C - -	36.5	80A

NOTE

Other output speeds are available using 2 and 8 pole motors - Consult Textron Power Transmission

0205

0.37 kW

6 POLE

N2 R/MIN	i	M2 Nm	Fm	N	Unit Designation	Kg	
Output Speed	Ratio	Output Torque	Service Factor	Overhung Load	Column Entry 1 Through 20 Spaces to be filled when entering order	Weight of base mount unit	Motor Size
13	72.28	265	2.36	7200	M 0 6 3 2 6 3 . _ M _ - _ _ . 3 7 C - -	37.5	80A
12	79.6	292	2.14	7008	7 1 .		
10	91.56	336	1.86	6645	8 0 .		
9.2	99.54	365	1.71	6403	1 0 0		
7.7	119.5	438	1.43	6626	1 1 2		
6.4	143.39	525	1.19	5470	1 2 5		
5.7	161.57	590	1.06	6424	1 6 0		
4.9	187.83	688	0.91	4961	1 8 0		
4.3	213.18	779	0.8	3099	2 0 0		
4.3	215.23	773	0.81	7200	M 0 6 4 2 2 2 5 _ M _ - _ _ . 3 7 C - -	50.5	80A
16	58.95	216	3.99	10000	M 0 7 3 2 5 6 . _ M _ - _ _ . 3 7 C - -	48.5	80A
15	62.83	231	3.76	10000	6 3 .		
12	74.47	274	3.16	10000	7 1 .		
12	79.51	291	2.98	10000	8 0 .		
9.3	98.66	361	2.4	10000	1 0 0		
7.9	116.34	426	2.04	10000	1 1 2		
7.2	127.39	466	1.86	10000	1 2 5		
5.9	156.12	569	1.54	10000	1 6 0		
5.3	174.01	635	1.39	8970	1 8 0		
4.7	195.15	711	1.25	7760	2 0 0		
4	229	821	1.06	4677	M 0 7 4 2 2 2 5 _ M _ - _ _ . 3 7 C - -	57.5	80A
3.5	259.68	929	0.93	4676	2 5 0		
3.2	286.42	1025	0.85	4676	2 8 0		
4	228.91	821	1.66	18916	M 0 8 4 2 2 2 5 _ M _ - _ _ . 3 7 C - -	105.5	80A
3.6	258.98	928	1.58	17870	2 5 0		
3.1	301.21	1079	1.36	17870	2 8 0		
2.7	337.01	1206	1.21	17870	3 0 0		
2.6	359.19	1286	1.14	17870	3 6 0		
2.2	425.69	1523	0.96	17870	4 0 0		
1.9	480.51	1717	0.9	16792	4 5 0		
1.8	513.04	1833	0.84	16792	5 0 0		
4	231.06	837	3.16	25710	M 0 9 4 1 2 2 5 _ M _ - _ _ . 3 7 C - -	149.5	80A
3.6	258.09	933	3.06	24951	2 5 0		
3.1	300.18	1085	2.63	24951	2 8 0		
2.7	335.85	1212	2.36	24951	3 0 0		
2.6	357.95	1293	2.21	24951	3 6 0		
2.2	424.23	1531	1.87	24951	4 0 0		
2	471.32	1699	1.68	24951	4 5 0		
1.8	503.22	1813	1.58	24951	5 0 0		
1.5	624.45	2246	1.27	24951	6 5 0		
1.2	736.35	2644	1.08	24951	7 3 0		
1	882.06	3161	0.9	24951	8 6 0		
0.34	2743.72	9589	1.11	80613	M 1 4 5 1 2 7 C _ M _ - _ _ . 3 7 C - -	406.5	80A
0.27	3404.7	11873	0.9	80613	3 2 C		

NOTE

Other output speeds are available using 2 and 8 pole motors - Consult Textron Power Transmission

0.55 kW

4 POLE

N2 R/MIN Output Speed	i Ratio	M2 Nm Output Torque	Fm Service Factor	N Overhung Load	Unit Designation Column Entry 1 Through 20 Spaces to be filled when entering order	Kg Weight of base mount unit	Motor Size
379	3.75	13	4.43	1625	M 0 1 2 2 3 . 6 _ M _ - _ _ . 5 5 A - -	18.5	80A
280	5.07	18	3.72	1705	5 . 0		
246	5.76	20	3.47	1740	5 . 6		
218	6.53	23	3.21	1711	6 . 3		
170	8.35	29	2.65	1706	8 . 0		
158	9	32	2.49	1703	9 . 0		
125	11.36	40	2.07	1720	1 1 .		
110	12.88	46	1.89	1720	1 2 .		
97	14.71	52	1.7	1570	1 4 .		
87	16.37	58	1.54	1831	1 6 .		
79	18.05	64	1.39	1736	1 8 .		
71	19.86	70	1.27	1558	2 0 .		
61	23.27	82	1.08	1770	2 2 .		
51	27.92	99	0.9	1320	2 8 .		
127	11.15	39	3.63	4000	M 0 2 2 2 1 1 . _ M _ - _ _ . 5 5 A - -	22.5	80A
115	12.37	44	3.35	4000	1 2 .		
101	14.05	50	3.04	4000	1 4 .		
89	15.97	57	2.8	4000	1 6 .		
81	17.58	62	2.55	3942	1 8 .		
70	20.23	72	2.21	3885	2 0 .		
65	21.99	78	2.03	4000	2 2 .		
54	26.4	94	1.7	3908	2 8 .		
45	31.68	112	1.42	4000	3 2 .		
40	35.69	126	1.26	4000	3 6 .		
34	41.49	147	1.08	4000	4 5 .		
30	47.09	167	0.95	4000	5 0 .		
27	53.54	190	0.84	3690	5 6 .		
101	14.05	50	3.85	4000	M 0 3 2 2 1 4 . _ M _ - _ _ . 5 5 A - -	22.5	80A
89	15.97	56	3.6	3972	1 6 .		
81	17.58	62	3.31	3934	1 8 .		
70	20.23	72	2.88	3798	2 0 .		
65	21.99	78	2.65	3719	2 2 .		
54	26.4	93	2.23	3380	2 8 .		
45	31.68	112	1.85	3469	3 2 .		
40	35.69	127	1.65	3143	3 6 .		
34	41.49	148	1.34	3584	4 5 .		
30	47.09	167	1.21	3091	5 0 .		
27	53.54	190	1.08	3690	5 6 .		
25	57.03	200	1.04	3390	M 0 3 3 2 5 6 . _ M _ - _ _ . 5 5 A - -	23.5	80A
23	62.87	221	0.94	2800	6 3 .		
21	69.19	243	0.86	2160	7 1 .		
52	27.3	97	3.44	7200	M 0 4 2 2 2 8 . _ M _ - _ _ . 5 5 A - -	30.5	80A
44	32.19	115	2.94	7200	3 2 .		
40	35.25	125	2.69	7200	3 6 .		
33	43.2	154	2.19	7200	4 5 .		
29	48.15	171	1.98	7200	5 0 .		
26	54	191	1.41	7200	5 6 .		
24	58.38	205	1.64	6917	M 0 4 3 2 5 6 . _ M _ - _ _ . 5 5 A - -	32.5	80A
22	64.29	227	1.49	7200	6 3 .		
19	73.95	261	1.29	7154	7 1 .		
18	80.4	283	1.19	7050	8 0 .		
15	96.52	340	0.99	7200	1 0 0		
12	115.82	407	0.83	6500	1 1 2		
397	3.58	13	3.72	1946	M 0 5 1 2 3 . 6 _ M _ - _ _ . 5 5 A - -	17.5	80A
360	3.94	14	3.4	1956	4 . 0		
313	4.53	16	3.06	1975	4 . 5		
288	4.93	17	2.71	1903	5 . 0		
240	5.92	21	2.39	1899	6 . 0		
200	7.1	25	1.99	1812	7 . 1		
178	8	28	1.78	1861	8 . 0		
44	32.19	115	3.9	7200	M 0 5 2 2 3 2 . _ M _ - _ _ . 5 5 A - -	31.5	80A
40	35.25	125	3.58	7200	3 6 .		
33	43.2	154	2.3	7200	4 5 .		
29	48.15	171	2.12	7200	5 0 .		
26	54	191	1.41	7200	5 6 .		
24	58.38	207	2.17	6869	M 0 5 3 2 5 6 . _ M _ - _ _ . 5 5 A - -	32.5	80A
22	64.29	227	1.98	6652	6 3 .		
19	73.95	261	1.72	5918	7 1 .		
18	80.4	284	1.58	6714	8 0 .		
15	96.52	340	1.32	5629	1 0 0		
12	115.82	408	1.1	5960	1 1 2		
11	130.5	459	0.98	4900	1 2 5		
9.4	151.71	534	0.84	3329	1 6 0		
27	53.49	190	2.76	7200	M 0 6 2 2 5 0 . _ M _ - _ _ . 5 5 A - -	36.5	80A
24	59.61	212	2.21	7200	5 6 .		

NOTE

Other output speeds are available using 2 and 8 pole motors - Consult Textron Power Transmission

0205

0.55 kW

4 POLE

N2 R/MIN	i	M2 Nm	Fm	N	Unit Designation	Kg	
Output Speed	Ratio	Output Torque	Service Factor	Overhung Load	Column Entry 1 Through 20 Spaces to be filled when entering order	Weight of base mount unit	Motor Size
20	72.28	254	2.46	7200	M 0 6 3 2 6 3 . _ M _ - _ _ . 5 5 A - -	37.5	80A
18	79.6	282	2.21	7200	7 1 .		
16	91.56	322	1.94	7200	8 0 .		
14	99.54	351	1.78	7200	1 0 0		
12	119.5	422	1.48	7200	1 1 2		
10	143.39	505	1.24	7200	1 2 5		
8.8	161.57	568	1.1	7200	1 6 0		
7.6	187.83	662	0.95	7200	1 8 0		
6.7	213.18	751	0.83	7200	2 0 0		
6.6	215.23	743	0.84	7200	M 0 6 4 2 2 2 5 _ M _ - _ _ . 5 5 A - -	50.5	80A
24	58.95	208	3.61	10000	M 0 7 3 2 5 6 . _ M _ - _ _ . 5 5 A - -	48.5	80A
23	62.83	221	3.47	10000	6 3 .		
19	74.47	263	3.1	10000	7 1 .		
18	79.51	280	2.97	10000	8 0 .		
14	98.66	348	2.49	10000	1 0 0		
12	116.34	409	2.12	10000	1 1 2		
11	127.39	447	1.94	10000	1 2 5		
9.1	156.12	548	1.58	10000	1 6 0		
8.2	174.01	611	1.42	9140	1 8 0		
7.3	195.15	684	1.27	7940	2 0 0		
6.2	229	790	1.1	4677	M 0 7 4 2 2 2 5 _ M _ - _ _ . 5 5 A - -	57.5	80A
5.5	259.68	894	0.97	4676	2 5 0		
5	286.42	986	0.88	4676	2 8 0		
12	119.19	419	3.94	20000	M 0 8 3 2 1 1 2 _ M _ - _ _ . 5 5 A - -	76.5	80A
11	130.92	461	3.58	20000	1 2 5		
8.9	160.45	565	2.92	20000	1 6 0		
8.1	175.21	617	2.67	20000	1 8 0		
7	201.75	707	2.33	20000	2 0 0		
6.2	228.91	788	1.73	18916	M 0 8 4 2 2 2 5 _ M _ - _ _ . 5 5 A - -	105.5	80A
5.5	258.98	891	1.64	17870	2 5 0		
4.7	301.21	1036	1.41	17870	2 8 0		
4.2	337.01	1158	1.26	17870	3 0 0		
4	359.19	1235	1.18	17870	3 6 0		
3.3	425.69	1464	1	17870	4 0 0		
3	480.51	1650	0.93	16792	4 5 0		
2.8	513.04	1761	0.87	16792	5 0 0		
6.1	231.06	805	3.29	25710	M 0 9 4 1 2 2 5 _ M _ - _ _ . 5 5 A - -	149.5	80A
5.5	258.09	898	3.18	24951	2 5 0		
4.7	300.18	1044	2.74	24951	2 8 0		
4.2	335.85	1166	2.45	24951	3 0 0		
4	357.95	1244	2.3	24951	3 6 0		
3.3	424.23	1473	1.94	24951	4 0 0		
3	471.32	1635	1.75	24951	4 5 0		
2.8	503.22	1745	1.64	24951	5 0 0		
2.3	624.45	2162	1.32	24951	6 5 0		
1.9	736.35	2546	1.12	24951	7 3 0		
1.6	882.06	3040	0.94	24951	8 6 0		
0.52	2743.72	9227	1.15	80613	M 1 4 5 1 2 7 C _ M _ - _ _ . 5 5 A - -	406.5	80A
0.42	3404.7	11435	0.93	80613	3 2 C		

NOTE

Other output speeds are available using 2 and 8 pole motors - Consult Textron Power Transmission

0205

0.55 kW

6 POLE

N2 R/MIN Output Speed	i Ratio	M2 Nm Output Torque	Fm Service Factor	N Overhung Load	Unit Designation Column Entry 1 Through 20 Spaces to be filled when entering order	Kg Weight of base mount unit	Motor Size
245	3.75	20	3.29	1673	M 0 1 2 2 3 . 6 _ M _ - _ _ . 5 5 C - -	20	80B
182	5.07	28	2.7	1720	5 . 0		
160	5.76	31	2.46	1715	5 . 6		
141	6.53	36	2.21	1720	6 . 3		
110	8.35	46	1.85	1720	8 . 0		
102	9	49	1.74	1671	9 . 0		
81	11.36	62	1.43	1341	1 1 .		
71	12.88	71	1.26	1129	1 2 .		
63	14.71	81	1.1	1066	1 4 .		
56	16.37	90	0.99	1083	1 6 .		
51	18.05	99	0.9	830	1 8 .		
46	19.86	109	0.82	603	2 0 .		
146	6.3	34	3.96	4000	M 0 2 2 2 6 . 3 _ M _ - _ _ . 5 5 C - -	24	80B
115	8	44	3.28	4000	8 . 0		
101	9.09	50	2.98	4000	9 . 0		
82	11.15	62	2.54	4000	1 1 .		
74	12.37	68	2.33	4000	1 2 .		
65	14.05	77	2.06	4000	1 4 .		
58	15.97	88	1.81	4000	1 6 .		
52	17.58	97	1.64	3921	1 8 .		
45	20.23	111	1.43	3604	2 0 .		
42	21.99	121	1.32	3414	2 2 .		
35	26.4	145	1.1	2793	2 8 .		
29	31.68	174	0.92	3013	3 2 .		
26	35.69	196	0.82	2481	3 6 .		
101	9.09	50	3.78	4000	M 0 3 2 2 9 . 0 _ M _ - _ _ . 5 5 C - -	24	80B
82	11.15	61	3.29	4000	1 1 .		
74	12.37	68	3.05	4000	1 2 .		
65	14.05	77	2.68	4000	1 4 .		
58	15.97	88	2.37	4000	1 6 .		
52	17.58	97	2.14	3871	1 8 .		
45	20.23	112	1.86	3549	2 0 .		
42	21.99	121	1.72	3332	2 2 .		
35	26.4	145	1.44	2793	2 8 .		
29	31.68	174	1.2	2391	3 2 .		
26	35.69	195	1.07	2391	3 6 .		
22	41.49	228	0.9	1687	4 5 .		
20	47.09	258	0.81	1403	5 0 .		
53	17.39	96	3.5	7200	M 0 4 2 2 1 8 . _ M _ - _ _ . 5 5 C - -	32	80B
45	20.61	114	2.96	7200	2 0 .		
42	22	122	2.77	7200	2 2 .		
34	27.3	150	2.25	6720	2 8 .		
29	32.19	177	1.9	6835	3 2 .		
26	35.25	194	1.74	6675	3 6 .		
21	43.2	237	1.42	6266	4 5 .		
19	48.15	264	1.28	6393	5 0 .		
17	54	296	0.91	6939	5 6 .		
16	58.38	318	1.06	4951	M 0 4 3 2 5 6 . _ M _ - _ _ . 5 5 C - -	34	80B
14	64.29	350	0.96	5849	6 3 .		
12	73.95	403	0.84	4817	7 1 .		
292	3.15	17	2.91	1920	M 0 5 1 2 3 . 2 _ M _ - _ _ . 5 5 C - -	19	80B
257	3.58	20	2.44	1979	3 . 6		
233	3.94	22	2.21	1950	4 . 0		
203	4.53	25	2.02	1936	4 . 5		
187	4.93	27	1.76	1908	5 . 0		
155	5.92	33	1.54	1835	6 . 0		
130	7.1	39	1.3	1727	7 . 1		
115	8	44	1.15	1662	8 . 0		
45	20.61	114	3.94	6989	M 0 5 2 2 2 0 . _ M _ - _ _ . 5 5 C - -	33	80B
42	22	121	3.69	6929	2 2 .		
34	27.3	151	2.98	6700	2 8 .		
29	32.19	178	2.53	6491	3 2 .		
26	35.25	194	2.32	6491	3 6 .		
21	43.2	237	1.71	6249	4 5 .		
19	48.15	264	1.43	6053	5 0 .		
17	54	296	0.91	6678	5 6 .		
16	58.38	318	1.41	5177	M 0 5 3 2 5 6 . _ M _ - _ _ . 5 5 C - -	34	80B
14	64.29	351	1.28	4710	6 3 .		
12	73.95	404	1.11	4304	7 1 .		
11	80.4	439	1.02	3999	8 0 .		
10	96.52	525	0.86	2526	1 0 0		
152	6.07	34	3.47	3270	M 0 6 1 2 6 . 0 _ M _ - _ _ . 5 5 C - -	24	80B
129	7.15	40	2.94	3201	7 . 1		
117	7.83	43	2.68	3182	8 . 0		
27	33.8	187	3.35	7200	M 0 6 2 2 3 2 . _ M _ - _ _ . 5 5 C - -	38	80B
23	39.86	220	2.84	7200	3 6 .		
21	43.64	241	2.6	7200	4 5 .		
17	53.49	294	1.85	7200	5 0 .		
15	59.61	328	1.43	6908	5 6 .		

NOTE

Other output speeds are available using 2 and 8 pole motors - Consult Textron Power Transmission

0.55 kW

6 POLE

N2 R/MIN Output Speed	i Ratio	M2 Nm Output Torque	Fm Service Factor	N Overhung Load	Unit Designation Column Entry 1 Through 20 Spaces to be filled when entering order	Kg Weight of base mount unit	Motor Size
13	72.28	394	1.59	7200	M 0 6 3 2 6 3 . _ M _ - _ _ . 5 5 C - -	39	80B
12	79.6	435	1.44	6720	7 1 .		
10	91.56	500	1.25	5812	8 0 .		
9.2	99.54	543	1.15	5209	1 0 0		
7.7	119.5	652	0.96	6083	1 1 2		
6.4	143.39	781	0.8	3831	1 2 5		
22	42.21	231	3.75	10000	M 0 7 2 2 4 5 . _ M _ - _ _ . 5 5 C - -	45	80B
19	48.56	266	2.63	10000	5 0 .		
17	53.96	294	2.02	10000	5 6 .		
16	58.95	322	2.68	9221	M 0 7 3 2 5 6 . _ M _ - _ _ . 5 5 C - -	50	80B
15	62.83	343	2.53	9072	6 3 .		
12	74.47	408	2.13	8636	7 1 .		
12	79.51	433	2	8446	8 0 .		
9.3	98.66	537	1.61	8407	1 0 0		
7.9	116.34	633	1.37	7534	1 1 2		
7.2	127.39	693	1.25	7534	1 2 5		
5.9	156.12	846	1.03	5591	1 6 0		
5.3	174.01	945	0.94	4721	1 8 0		
4.7	195.15	1057	0.84	4084	2 0 0		
9	102.2	557	2.96	20000	M 0 8 3 2 1 0 0 _ M _ - _ _ . 5 5 C - -	78	80B
7.7	119.19	648	2.54	20000	1 1 2		
7	130.92	711	2.32	20000	1 2 5		
5.7	160.45	876	1.88	20000	1 6 0		
5.3	175.21	952	1.73	20000	1 8 0		
4.6	201.75	1093	1.51	20000	2 0 0		
4	228.91	1221	1.12	18916	M 0 8 4 2 2 2 5 _ M _ - _ _ . 5 5 C - -	107	80B
3.6	258.98	1380	1.06	17870	2 5 0		
3.1	301.21	1604	0.91	17870	2 8 0		
2.7	337.01	1792	0.82	17870	3 0 0		
6.3	145.2	791	3.12	29600	M 0 9 3 1 1 4 0 _ M _ - _ _ . 5 5 C - -	129	80B
5.7	160.29	875	2.82	29500	1 6 0		
4	231.06	1244	2.13	25710	M 0 9 4 1 2 2 5 _ M _ - _ _ . 5 5 C - -	151	80B
3.6	258.09	1388	2.06	24951	2 5 0		
3.1	300.18	1613	1.77	24951	2 8 0		
2.7	335.85	1802	1.59	24951	3 0 0		
2.6	357.95	1922	1.49	24951	3 6 0		
2.2	424.23	2275	1.26	24951	4 0 0		
2	471.32	2525	1.13	24951	4 5 0		
1.8	503.22	2695	1.06	24951	5 0 0		
1.5	624.45	3339	0.86	24951	6 5 0		
4.2	220.22	1179	3.74	41580	M 1 0 4 1 2 2 5 _ M _ - _ _ . 5 5 C - -	213	80B
3.8	242.24	1297	3.4	41580	2 5 0		
3.3	278.36	1489	2.96	41580	2 8 0		
2.9	315.65	1686	2.62	41580	3 0 0		
2.6	348.16	1861	2.37	41580	3 6 0		
2.3	398.71	2130	2.07	41580	4 0 0		
2.1	443.06	2364	1.87	41580	4 5 0		
1.8	500.94	2670	1.65	41580	5 0 0		
1.6	580.78	3093	1.43	41580	6 5 0		
1.3	692.72	3683	1.2	41580	7 3 0		
1.1	828.21	4397	1	41580	8 6 0		
0.93	987.84	5238	0.84	41580	1 0 C		
2.8	325.33	1733	3.66	64632	M 1 3 4 1 3 0 0 _ M _ - _ _ . 5 5 C - -	287	80B
2.6	358.84	1912	3.32	64632	3 6 0		
2.2	410.95	2189	2.9	64632	4 0 0		
2	463.22	2466	2.57	64632	4 5 0		
1.8	523.74	2786	2.28	64632	5 0 0		
1.5	607.22	3226	1.97	64632	6 5 0		
1.3	724.25	3842	1.65	64632	7 3 0		
1.1	858.69	4535	1.4	64632	8 6 0		
0.9	1024.19	5402	1.18	64632	1 0 C		
0.81	1140.7	6006	1.06	64632	1 1 C		
0.74	1249.19	6571	0.97	64632	1 3 C		
0.6	1528.11	8013	0.81	64690	1 5 C		
1.7	556.83	2961	3.64	80613	M 1 4 4 1 5 0 0 _ M _ - _ _ . 5 5 C - -	403	80B
1.4	645.58	3429	3.14	80613	6 5 0		
1.2	770.01	4083	2.64	80613	7 3 0		
1.1	801.52	4244	2.51	80613	8 6 0		
0.99	929.27	4915	2.17	80613	1 0 C		
0.83	1108.37	5853	1.82	80613	1 1 C		
0.76	1213.79	6404	1.66	80613	1 3 C		
0.61	1502.21	7906	1.28	80711	1 5 C		
0.51	1802.65	9464	1.07	80711	1 8 C		
0.44	2074.02	10876	0.93	80711	2 0 C		
0.4	2304.47	12062	0.84	80711	2 4 C		

NOTE

Other output speeds are available using 2 and 8 pole motors - Consult Textron Power Transmission

0.75 kW

4 POLE

N2 R/MIN Output Speed	i Ratio	M2 Nm Output Torque	Fm Service Factor	N Overhung Load	Unit Designation Column Entry 1 Through 20 Spaces to be filled when entering order	Kg Weight of base mount unit	Motor Size
377	3.75	18	3.24	1596	M 0 1 2 2 3 . 6 _ M _ - _ _ . 7 5 A - -	18.5	80A
279	5.07	24	2.72	1665	5 . 0		
246	5.76	28	2.54	1694	5 . 6		
217	6.53	32	2.34	1633	6 . 3		
169	8.35	40	1.94	1616	8 . 0		
157	9	44	1.82	1612	9 . 0		
125	11.36	55	1.51	1636	1 1 .		
110	12.88	63	1.38	1636	1 2 .		
96	14.71	72	1.25	1417	1 4 .		
86	16.37	79	1.12	1800	1 6 .		
78	18.05	88	1.02	1660	1 8 .		
71	19.86	96	0.93	1400	2 0 .		
177	8	39	3.47	4000	M 0 2 2 2 8 . 0 _ M _ - _ _ . 7 5 A - -	22.5	80A
156	9.09	44	3.14	4000	9 . 0		
127	11.15	54	2.65	4000	1 1 .		
114	12.37	60	2.45	4000	1 2 .		
101	14.05	68	2.22	4000	1 4 .		
89	15.97	78	2.04	3968	1 6 .		
80	17.58	85	1.86	3878	1 8 .		
70	20.23	99	1.61	3757	2 0 .		
64	21.99	107	1.48	4000	2 2 .		
54	26.4	128	1.24	3847	2 8 .		
45	31.68	154	1.04	4000	3 2 .		
40	35.69	173	0.92	4000	3 6 .		
156	9.09	44	3.76	4000	M 0 3 2 2 9 . 0 _ M _ - _ _ . 7 5 A - -	22.5	80A
127	11.15	54	3.28	4000	1 1 .		
114	12.37	60	3.07	4000	1 2 .		
101	14.05	69	2.81	4000	1 4 .		
89	15.97	77	2.63	3957	1 6 .		
80	17.58	85	2.42	3898	1 8 .		
70	20.23	99	2.11	3689	2 0 .		
64	21.99	107	1.94	3568	2 2 .		
54	26.4	128	1.63	3045	2 8 .		
45	31.68	154	1.35	3182	3 2 .		
40	35.69	173	1.2	2680	3 6 .		
34	41.49	202	0.98	3360	4 5 .		
30	47.09	229	0.88	2600	5 0 .		
81	17.39	85	3.64	6430	M 0 4 2 2 1 8 . _ M _ - _ _ . 7 5 A - -	30.5	80A
69	20.61	100	3.16	6750	2 0 .		
64	22	107	2.99	6880	2 2 .		
52	27.3	133	2.51	7052	2 8 .		
44	32.19	157	2.15	7124	3 2 .		
40	35.25	172	1.96	7147	3 6 .		
33	43.2	211	1.6	6970	4 5 .		
29	48.15	234	1.44	7178	5 0 .		
26	54	262	1.03	7200	5 6 .		
24	58.38	281	1.2	6729	M 0 4 3 2 5 6 . _ M _ - _ _ . 7 5 A - -	32.5	80A
22	64.29	310	1.09	7200	6 3 .		
19	73.95	357	0.95	7130	7 1 .		
18	80.4	388	0.87	6970	8 0 .		
449	3.15	15	2.97	1780	M 0 5 1 2 3 . 2 _ M _ - _ _ . 7 5 A - -	17.5	80A
395	3.58	17	2.72	1903	3 . 6		
359	3.94	19	2.49	1903	4 . 0		
312	4.53	22	2.24	1907	4 . 5		
287	4.93	24	1.98	1789	5 . 0		
239	5.92	29	1.74	1749	6 . 0		
199	7.1	35	1.46	1617	7 . 1		
177	8	39	1.3	1690	8 . 0		
52	27.3	134	3.36	6723	M 0 5 2 2 2 8 . _ M _ - _ _ . 7 5 A - -	31.5	80A
44	32.19	157	2.85	6875	3 2 .		
40	35.25	172	2.62	6769	3 6 .		
33	43.2	210	1.68	6865	4 5 .		
29	48.15	234	1.55	6658	5 0 .		
26	54	262	1.03	7200	5 6 .		
24	58.38	283	1.59	6502	M 0 5 3 2 5 6 . _ M _ - _ _ . 7 5 A - -	32.5	80A
22	64.29	311	1.44	6044	6 3 .		
19	73.95	358	1.26	5064	7 1 .		
18	80.4	389	1.16	6390	8 0 .		
15	96.52	466	0.97	4780	1 0 0		
233	6.07	30	3.9	3270	M 0 6 1 2 6 . 0 _ M _ - _ _ . 7 5 A - -	22.5	80A
198	7.15	35	3.32	3273	7 . 1		
181	7.83	38	3.03	3260	8 . 0		
42	33.8	165	3.77	7200	M 0 6 2 2 3 2 . _ M _ - _ _ . 7 5 A - -	36.5	80A
36	39.86	194	3.21	7200	3 6 .		
32	43.64	213	2.93	7200	4 5 .		
26	53.49	260	2.02	7200	5 0 .		
24	59.61	291	1.61	7200	5 6 .		

NOTE

Other output speeds are available using 2 and 8 pole motors - Consult Textron Power Transmission

0.75 kW

4 POLE

N2 R/MIN Output Speed	i Ratio	M2 Nm Output Torque	Fm Service Factor	N Overhung Load	Unit Designation Column Entry 1 Through 20 Spaces to be filled when entering order	Kg Weight of base mount unit	Motor Size
20	72.28	348	1.8	7200	M 0 6 3 2 6 3 . _ M _ - _ _ . 7 5 A - -	37.5	80A
18	79.6	386	1.61	7200	7 1 .		
15	91.56	441	1.42	7200	8 0 .		
14	99.54	481	1.3	7200	1 0 0		
12	119.5	577	1.08	7200	1 1 2		
10	143.39	691	0.91	7200	1 2 5		
29	48.56	235	2.97	10000	M 0 7 2 2 5 0 . _ M _ - _ _ . 7 5 A - -	43.5	80A
26	53.96	261	2.28	10000	5 6 .		
24	58.95	285	2.64	9458	M 0 7 3 2 5 6 . _ M _ - _ _ . 7 5 A - -	48.5	80A
23	62.83	303	2.54	9349	6 3 .		
19	74.47	359	2.26	9454	7 1 .		
18	79.51	383	2.17	9288	8 0 .		
14	98.66	476	1.82	8661	1 0 0		
12	116.34	560	1.55	8450	1 1 2		
11	127.39	612	1.42	7996	1 2 5		
9.1	156.12	751	1.16	6910	1 6 0		
8.1	174.01	837	1.04	5530	1 8 0		
7.3	195.15	936	0.93	3899	2 0 0		
6.2	229	1081	0.8	4677	M 0 7 4 2 2 2 5 _ M _ - _ _ . 7 5 A - -	57.5	80A
14	102.2	493	3.34	20000	M 0 8 3 2 1 0 0 _ M _ - _ _ . 7 5 A - -	76.5	80A
12	119.19	573	2.88	19337	1 1 2		
11	130.92	630	2.62	19051	1 2 5		
8.8	160.45	773	2.13	19410	1 6 0		
8.1	175.21	845	1.95	18989	1 8 0		
7	201.75	968	1.7	18252	2 0 0		
6.2	228.91	1079	1.27	18916	M 0 8 4 2 2 2 5 _ M _ - _ _ . 7 5 A - -	105.5	80A
5.5	258.98	1219	1.2	17870	2 5 0		
4.7	301.21	1418	1.03	17870	2 8 0		
4.2	337.01	1585	0.92	17870	3 0 0		
3.9	359.19	1691	0.87	17870	3 6 0		
10	145.2	700	3.53	29600	M 0 9 3 1 1 4 0 _ M _ - _ _ . 7 5 A - -	127.5	80A
8.8	160.29	771	3.2	29600	1 6 0		
6.1	231.06	1101	2.4	25710	M 0 9 4 1 2 2 5 _ M _ - _ _ . 7 5 A - -	149.5	80A
5.5	258.09	1228	2.33	24951	2 5 0		
4.7	300.18	1428	2	24951	2 8 0		
4.2	335.85	1596	1.79	24951	3 0 0		
4	357.95	1702	1.68	24951	3 6 0		
3.3	424.23	2016	1.42	24951	4 0 0		
3	471.32	2237	1.28	24951	4 5 0		
2.8	503.22	2388	1.2	24951	5 0 0		
2.3	624.45	2959	0.97	24951	6 5 0		
1.9	736.35	3485	0.82	24951	7 3 0		
5.8	242.24	1148	3.84	41580	M 1 0 4 1 2 5 0 _ M _ - _ _ . 7 5 A - -	211.5	80A
5.1	278.36	1318	3.35	41580	2 8 0		
4.5	315.65	1493	2.95	41580	3 0 0		
4.1	348.16	1648	2.68	41580	3 6 0		
3.5	398.71	1886	2.34	41580	4 0 0		
3.2	443.06	2093	2.11	41580	4 5 0		
2.8	500.94	2365	1.87	41580	5 0 0		
2.4	580.78	2740	1.61	41580	6 5 0		
2	692.72	3264	1.35	41580	7 3 0		
1.7	828.21	3892	1.13	41580	8 6 0		
1.4	987.84	4638	0.95	41580	1 0 C		
1.2	1138.21	5332	0.83	41580	1 1 C		
3.9	358.84	1694	3.75	64632	M 1 3 4 1 3 6 0 _ M _ - _ _ . 7 5 A - -	285.5	80A
3.4	410.95	1939	3.27	64632	4 0 0		
3.1	463.22	2185	2.91	64632	4 5 0		
2.7	523.74	2468	2.57	64632	5 0 0		
2.3	607.22	2859	2.22	64632	6 5 0		
2	724.25	3406	1.86	64632	7 3 0		
1.6	858.69	4016	1.58	64632	8 6 0		
1.4	1024.19	4785	1.33	64632	1 0 C		
1.2	1140.7	5319	1.19	64632	1 1 C		
1.1	1249.19	5821	1.09	64632	1 3 C		
0.93	1528.11	7097	0.91	64690	1 5 C		
2.2	645.58	3040	3.54	80613	M 1 4 4 1 6 5 0 _ M _ - _ _ . 7 5 A - -	401.5	80A
1.8	770.01	3621	2.97	80613	7 3 0		
1.8	801.52	3760	2.83	80613	8 6 0		
1.5	929.27	4355	2.45	80613	1 0 C		
1.3	1108.37	5188	2.05	80613	1 1 C		
1.2	1213.79	5677	1.88	80613	1 3 C		
0.94	1502.21	7007	1.44	80711	1 5 C		
0.78	1802.65	8391	1.2	80711	1 8 C		
0.68	2074.02	9645	1.05	80711	2 0 C		
0.61	2304.47	10700	0.94	80711	2 4 C		
0.52	2743.72	12627	0.84	80613	M 1 4 5 1 2 7 C _ M _ - _ _ . 7 5 A - -	406.5	80A

NOTE

Other output speeds are available using 2 and 8 pole motors - Consult Textron Power Transmission

0.75 kW

6 POLE

N2 R/MIN Output Speed	i Ratio	M2 Nm Output Torque	Fm Service Factor	N Overhung Load	Unit Designation Column Entry 1 Through 20 Spaces to be filled when entering order	Kg Weight of base mount unit	Motor Size
245	3.75	28	2.41	1610	M 0 1 2 2 3 . 6 _ M _ - _ _ . 7 5 C - -	23.5	90S
182	5.07	38	1.98	1636	5 . 0		
160	5.76	43	1.8	1630	5 . 6		
141	6.53	49	1.62	1636	6 . 3		
110	8.35	62	1.35	1636	8 . 0		
102	9	67	1.28	1565	9 . 0		
81	11.36	85	1.05	1081	1 1 .		
71	12.88	96	0.93	770	1 2 .		
63	14.71	110	0.81	678	1 4 .		
183	5.03	37	3.45	4000	M 0 2 2 2 5 . 0 _ M _ - _ _ . 7 5 C - -	26.5	90S
166	5.55	41	3.19	4000	5 . 6		
146	6.3	47	2.9	4000	6 . 3		
115	8	60	2.4	4000	8 . 0		
101	9.09	68	2.18	4000	9 . 0		
82	11.15	84	1.87	4000	1 1 .		
74	12.37	93	1.71	4000	1 2 .		
65	14.05	106	1.51	4000	1 4 .		
58	15.97	120	1.33	4000	1 6 .		
52	17.58	132	1.21	3833	1 8 .		
45	20.23	152	1.05	3341	2 0 .		
42	21.99	165	0.97	3023	2 2 .		
35	26.4	198	0.81	2141	2 8 .		
166	5.55	41	3.8	4000	M 0 3 2 2 5 . 6 _ M _ - _ _ . 7 5 C - -	26.5	90S
146	6.3	47	3.5	4000	6 . 3		
115	8	60	3.02	4000	8 . 0		
101	9.09	68	2.77	4000	9 . 0		
82	11.15	84	2.41	4000	1 1 .		
74	12.37	93	2.24	4000	1 2 .		
65	14.05	106	1.97	4000	1 4 .		
58	15.97	120	1.74	4000	1 6 .		
52	17.58	132	1.57	3801	1 8 .		
45	20.23	152	1.37	3306	2 0 .		
42	21.99	165	1.26	2971	2 2 .		
35	26.4	198	1.05	2141	2 8 .		
29	31.68	237	0.88	1521	3 2 .		
73	12.54	94	3.44	6590	M 0 4 2 2 1 2 . _ M _ - _ _ . 7 5 C - -	35.5	90S
63	14.58	110	3.07	6880	1 4 .		
56	16.31	123	2.75	7100	1 6 .		
53	17.39	131	2.57	7050	1 8 .		
45	20.61	155	2.17	6996	2 0 .		
42	22	166	2.03	6915	2 2 .		
34	27.3	205	1.65	6186	2 8 .		
29	32.19	242	1.39	6429	3 2 .		
26	35.25	265	1.28	6093	3 6 .		
21	43.2	324	1.04	5229	4 5 .		
19	48.15	360	0.94	5497	5 0 .		
513	1.79	13	3.67	1730	M 0 5 1 2 1 . 8 _ M _ - _ _ . 7 5 C - -	22.5	90S
452	2.04	15	3.3	1750	2 . 0		
368	2.5	19	2.68	1800	2 . 5		
332	2.77	21	2.41	1810	2 . 8		
292	3.15	24	2.13	1821	3 . 2		
257	3.58	27	1.79	1881	3 . 6		
233	3.94	30	1.62	1826	4 . 0		
203	4.53	34	1.48	1777	4 . 5		
187	4.93	37	1.29	1734	5 . 0		
155	5.92	45	1.13	1622	6 . 0		
130	7.1	54	0.95	1456	7 . 1		
115	8	61	0.85	1356	8 . 0		
56	16.31	123	3.65	6381	M 0 5 2 2 1 6 . _ M _ - _ _ . 7 5 C - -	36.5	90S
53	17.39	131	3.42	6708	1 8 .		
45	20.61	155	2.89	6755	2 0 .		
42	22	166	2.71	6628	2 2 .		
34	27.3	205	2.18	6145	2 8 .		
29	32.19	242	1.85	5704	3 2 .		
26	35.25	264	1.7	5704	3 6 .		
21	43.2	324	1.25	5192	4 5 .		
19	48.15	360	1.05	4778	5 0 .		
16	58.38	434	1.03	3829	M 0 5 3 2 5 6 . _ M _ - _ _ . 7 5 C - -	37.5	90S
14	64.29	479	0.94	3050	6 3 .		
12	73.95	551	0.82	2739	7 1 .		
238	3.86	29	3.97	3280	M 0 6 1 2 4 . 0 _ M _ - _ _ . 7 5 C - -	27.5	90S
201	4.58	35	3.35	3270	4 . 5		
188	4.89	37	3.14	3269	5 . 0		
152	6.07	46	2.54	3215	6 . 0		
129	7.15	54	2.16	3113	7 . 1		
117	7.83	59	1.97	3074	8 . 0		
36	25.51	192	3.25	7200	M 0 6 2 2 2 2 . _ M _ - _ _ . 7 5 C - -	41.5	90S
34	27.24	205	3.04	7200	2 8 .		
27	33.8	255	2.45	7200	3 2 .		
23	39.86	300	2.08	7010	3 6 .		
21	43.64	328	1.9	6813	4 5 .		
17	53.49	401	1.35	7193	5 0 .		
15	59.61	447	1.05	6584	5 6 .		

NOTE

Other output speeds are available using 2 and 8 pole motors - Consult Textron Power Transmission

0.75 kW

6 POLE

N2 R/MIN Output Speed	i Ratio	M2 Nm Output Torque	Fm Service Factor	N Overhung Load	Unit Designation Column Entry 1 Through 20 Spaces to be filled when entering order	Kg Weight of base mount unit	Motor Size
13	72.28	538	1.16	7200	M 0 6 3 2 6 3 . _ M _ - _ _ . 7 5 C - -	42.5	90S
12	79.6	593	1.05	6400	7 1 .		
10	91.56	682	0.92	4888	8 0 .		
9.2	99.54	741	0.84	3882	1 0 0		
119	7.75	59	3.69	7321	M 0 7 1 2 8 . 0 _ M _ - _ _ . 7 5 C - -	34.5	90S
29	32.12	241	3.59	9420	M 0 7 2 2 3 2 . _ M _ - _ _ . 7 5 C - -	48.5	90S
26	35.17	264	3.28	9420	3 6 .		
22	42.21	315	2.75	9183	4 5 .		
19	48.56	363	1.93	9043	5 0 .		
17	53.96	402	1.48	9208	5 6 .		
16	58.95	439	1.97	8355	M 0 7 3 2 5 6 . _ M _ - _ _ . 7 5 C - -	53.5	90S
15	62.83	468	1.85	8042	6 3 .		
12	74.47	556	1.56	7121	7 1 .		
12	79.51	590	1.47	6721	8 0 .		
9.3	98.66	733	1.18	6637	1 0 0		
7.9	116.34	864	1	4794	1 1 2		
7.2	127.39	946	0.92	4794	1 2 5		
16	55.8	416	3.72	20000	M 0 8 2 2 5 6 . _ M _ - _ _ . 7 5 C - -	81.5	90S
14	66.02	490	3.36	20000	M 0 8 3 2 6 3 . _ M _ - _ _ . 7 5 C - -	81.5	90S
12	74.69	556	2.96	20000	7 1 .		
11	84.31	626	2.63	20000	8 0 .		
9	102.2	759	2.17	18367	1 0 0		
7.7	119.19	884	1.87	17935	1 1 2		
7	130.92	970	1.7	17575	1 2 5		
5.7	160.45	1195	1.38	17044	1 6 0		
5.3	175.21	1299	1.27	16406	1 8 0		
4.6	201.75	1491	1.11	15789	2 0 0		
4	228.91	1665	0.82	18916	M 0 8 4 2 2 2 5 _ M _ - _ _ . 7 5 C - -	112.5	90S
7.9	116.55	870	3.28	29500	M 0 9 3 1 1 1 2 _ M _ - _ _ . 7 5 C - -	131.5	90S
7.2	128.66	960	2.98	29500	1 2 5		
6.3	145.2	1079	2.29	29442	1 4 0		
5.7	160.29	1193	2.07	29330	1 6 0		
4	231.06	1696	1.56	25710	M 0 9 4 1 2 2 5 _ M _ - _ _ . 7 5 C - -	156.5	90S
3.6	258.09	1892	1.51	24951	2 5 0		
3.1	300.18	2200	1.3	24951	2 8 0		
2.7	335.85	2457	1.16	24951	3 0 0		
2.6	357.95	2621	1.09	24951	3 6 0		
2.2	424.23	3103	0.92	24951	4 0 0		
2	471.32	3444	0.83	24951	4 5 0		
4.2	220.22	1608	2.74	41580	M 1 0 4 1 2 2 5 _ M _ - _ _ . 7 5 C - -	217.5	90S
3.8	242.24	1768	2.49	41580	2 5 0		
3.3	278.36	2031	2.17	41580	2 8 0		
2.9	315.65	2300	1.92	41580	3 0 0		
2.6	348.16	2538	1.74	41580	3 6 0		
2.3	398.71	2904	1.52	41580	4 0 0		
2.1	443.06	3224	1.37	41580	4 5 0		
1.8	500.94	3642	1.21	41580	5 0 0		
1.6	580.78	4217	1.05	41580	6 5 0		
1.3	692.72	5022	0.88	41580	7 3 0		
4.1	226.98	1653	3.84	64632	M 1 3 4 1 2 2 5 _ M _ - _ _ . 7 5 C - -	292.5	90S
3.7	249.68	1818	3.49	64632	2 5 0		
3.2	286.9	2087	3.04	64632	2 8 0		
2.8	325.33	2363	2.69	64632	3 0 0		
2.6	358.84	2608	2.43	64632	3 6 0		
2.2	410.95	2985	2.13	64632	4 0 0		
2	463.22	3363	1.89	64632	4 5 0		
1.8	523.74	3799	1.67	64632	5 0 0		
1.5	607.22	4400	1.44	64632	6 5 0		
1.3	724.25	5239	1.21	64632	7 3 0		
1.1	858.69	6184	1.03	64632	8 6 0		
0.9	1024.19	7366	0.86	64632	1 0 C		
2.4	390.06	2836	3.74	80613	M 1 4 4 1 3 6 0 _ M _ - _ _ . 7 5 C - -	408.5	90S
2.1	446.71	3245	3.26	80613	4 0 0		
1.9	492.49	3575	3.01	80613	4 5 0		
1.7	556.83	4038	2.67	80613	5 0 0		
1.4	645.58	4676	2.3	80613	6 5 0		
1.2	770.01	5568	1.93	80613	7 3 0		
1.1	801.52	5787	1.84	80613	8 6 0		
0.99	929.27	6702	1.59	80613	1 0 C		
0.83	1108.37	7982	1.33	80613	1 1 C		
0.76	1213.79	8732	1.22	80613	1 3 C		
0.61	1502.21	10781	0.94	80711	1 5 C		

NOTE

Other output speeds are available using 2 and 8 pole motors - Consult Textron Power Transmission

1.1 kW

4 POLE

N2 R/MIN Output Speed	i Ratio	M2 Nm Output Torque	Fm Service Factor	N Overhung Load	Unit Designation Column Entry 1 Through 20 Spaces to be filled when entering order	Kg Weight of base mount unit	Motor Size
376	3.75	26	2.2	1543	M 0 1 2 2 3 . 6 _ M _ - _ _ 1 . 1 A - -	23.5	90S
278	5.07	36	1.85	1596	5 . 0		
245	5.76	41	1.72	1613	5 . 6		
216	6.53	47	1.59	1496	6 . 3		
169	8.35	60	1.32	1459	8 . 0		
157	9	65	1.24	1452	9 . 0		
124	11.36	82	1.03	1490	1 1 .		
109	12.88	92	0.94	1490	1 2 .		
96	14.71	106	0.85	1150	1 4 .		
393	3.59	25	3.88	3750	M 0 2 2 2 3 . 6 _ M _ - _ _ 1 . 1 A - -	26.5	90S
280	5.03	36	3.19	3950	5 . 0		
254	5.55	40	3.01	4000	5 . 6		
224	6.3	45	2.79	3992	6 . 3		
176	8	57	2.36	4000	8 . 0		
155	9.09	65	2.13	4000	9 . 0		
126	11.15	80	1.8	4000	1 1 .		
114	12.37	89	1.66	4000	1 2 .		
100	14.05	101	1.51	4000	1 4 .		
88	15.97	115	1.39	3913	1 6 .		
80	17.58	126	1.26	3767	1 8 .		
70	20.23	145	1.1	3534	2 0 .		
64	21.99	158	1.01	4000	2 2 .		
53	26.4	189	0.84	3740	2 8 .		
280	5.03	36	3.73	3920	M 0 3 2 2 5 . 0 _ M _ - _ _ 1 . 1 A - -	26.5	90S
254	5.55	39	3.51	3970	5 . 6		
224	6.3	45	3.24	3990	6 . 3		
176	8	57	2.78	4000	8 . 0		
155	9.09	65	2.55	4000	9 . 0		
126	11.15	80	2.23	4000	1 1 .		
114	12.37	89	2.09	4000	1 2 .		
100	14.05	101	1.91	4000	1 4 .		
88	15.97	114	1.79	3931	1 6 .		
80	17.58	126	1.64	3836	1 8 .		
70	20.23	145	1.43	3498	2 0 .		
64	21.99	158	1.32	3303	2 2 .		
53	26.4	189	1.11	2459	2 8 .		
45	31.68	227	0.92	2680	3 2 .		
40	35.69	255	0.82	1870	3 6 .		
112	12.54	90	3.13	5720	M 0 4 2 2 1 2 . _ M _ - _ _ 1 . 1 A - -	35.5	90S
97	14.58	105	2.8	5940	1 4 .		
86	16.31	117	2.6	6130	1 6 .		
81	17.39	125	2.48	6229	1 8 .		
68	20.61	148	2.15	6512	2 0 .		
64	22	158	2.03	6624	2 2 .		
52	27.3	196	1.71	6794	2 8 .		
44	32.19	231	1.46	6991	3 2 .		
40	35.25	253	1.33	7055	3 6 .		
33	43.2	310	1.09	6568	4 5 .		
29	48.15	344	0.98	7140	5 0 .		
24	58.38	414	0.82	6400	M 0 4 3 2 5 6 . _ M _ - _ _ 1 . 1 A - -	36.5	90S
786	1.79	13	3.34	1630	M 0 5 1 2 1 . 8 _ M _ - _ _ 1 . 1 A - -	22.5	90S
692	2.04	15	3.13	1640	2 . 0		
564	2.5	18	2.8	1660	2 . 5		
509	2.77	20	2.53	1660	2 . 8		
448	3.15	23	2.02	1722	3 . 2		
394	3.58	26	1.85	1827	3 . 6		
358	3.94	29	1.69	1810	4 . 0		
311	4.53	33	1.52	1790	4 . 5		
286	4.93	36	1.34	1588	5 . 0		
238	5.92	43	1.18	1488	6 . 0		
199	7.1	52	0.99	1277	7 . 1		
176	8	58	0.88	1390	8 . 0		
86	16.31	117	3.82	5743	M 0 5 2 2 1 6 . _ M _ - _ _ 1 . 1 A - -	36.5	90S
81	17.39	125	3.58	5832	1 8 .		
68	20.61	148	3.02	6042	2 0 .		
64	22	159	2.83	5957	2 2 .		
52	27.3	197	2.28	6188	2 8 .		
44	32.19	232	1.94	6307	3 2 .		
40	35.25	253	1.78	6015	3 6 .		
33	43.2	310	1.14	6279	4 5 .		
29	48.15	345	1.05	5712	5 0 .		
24	58.38	417	1.08	5860	M 0 5 3 2 5 6 . _ M _ - _ _ 1 . 1 A - -	37.5	90S
22	64.29	458	0.98	4980	6 3 .		
19	73.95	526	0.85	3570	7 1 .		
308	4.58	33	3.5	3270	M 0 6 1 2 4 . 5 _ M _ - _ _ 1 . 1 A - -	27.5	90S
288	4.89	35	3.29	3238	5 . 0		
232	6.07	44	2.65	3179	6 . 0		
197	7.15	52	2.25	3261	7 . 1		
180	7.83	57	2.06	3226	8 . 0		
55	25.51	184	3.39	7200	M 0 6 2 2 2 2 . _ M _ - _ _ 1 . 1 A - -	41.5	90S
52	27.24	196	3.18	7200	2 8 .		
42	33.8	244	2.56	7200	3 2 .		
35	39.86	286	2.18	7200	3 6 .		
32	43.64	314	1.99	7200	4 5 .		
26	53.49	383	1.37	7200	5 0 .		
24	59.61	428	1.1	7200	5 6 .		

NOTE

Other output speeds are available using 2 and 8 pole motors - Consult Textron Power Transmission

1.1 kW

4 POLE

N2 R/MIN Output Speed	i Ratio	M2 Nm Output Torque	Fm Service Factor	N Overhung Load	Unit Designation Column Entry 1 Through 20 Spaces to be filled when entering order	Kg Weight of base mount unit	Motor Size
20	72.28	513	1.22	7200	M 0 6 3 2 6 3 . _ M _ - _ _ 1 . 1 A - -	42.5	90S
18	79.6	568	1.1	7200	7 1 .		
15	91.56	649	0.96	7200	8 0 .		
14	99.54	708	0.88	7200	1 0 0		
182	7.75	56	3.86	6740	M 0 7 1 2 8 . 0 _ M _ - _ _ 1 . 1 A - -	34.5	90S
44	32.12	231	3.63	9517	M 0 7 2 2 3 2 . _ M _ - _ _ 1 . 1 A - -	48.5	90S
40	35.17	252	3.35	9379	3 6 .		
33	42.21	302	2.86	9338	4 5 .		
29	48.56	347	2.02	9397	5 0 .		
26	53.96	385	1.55	10000	5 6 .		
24	58.95	420	1.79	8510	M 0 7 3 2 5 6 . _ M _ - _ _ 1 . 1 A - -	53.5	90S
22	62.83	446	1.72	8210	6 3 .		
19	74.47	529	1.54	8500	7 1 .		
18	79.51	564	1.48	8043	8 0 .		
14	98.66	701	1.24	6317	1 0 0		
12	116.34	825	1.05	5740	1 1 2		
11	127.39	900	0.96	4490	1 2 5		
25	55.8	399	3.85	20000	M 0 8 2 2 5 6 . _ M _ - _ _ 1 . 1 A - -	81.5	90S
23	60.33	427	3.74	20000	M 0 8 3 2 5 6 . _ M _ - _ _ 1 . 1 A - -	81.5	90S
21	66.02	470	3.51	20000	6 3 .		
19	74.69	530	3.11	20000	7 1 .		
17	84.31	598	2.76	20000	8 0 .		
14	102.2	726	2.27	18631	1 0 0		
12	119.19	844	1.95	18177	1 1 2		
11	130.92	928	1.78	17391	1 2 5		
8.8	160.45	1138	1.45	18378	1 6 0		
8	175.21	1244	1.33	17221	1 8 0		
7	201.75	1424	1.16	15194	2 0 0		
6.2	228.91	1588	0.86	18916	M 0 8 4 2 2 2 5 _ M _ - _ _ 1 . 1 A - -	112.5	90S
5.4	258.98	1795	0.82	17870	2 5 0		
15	93.92	669	3.94	29600	M 0 9 3 1 9 0 . _ M _ - _ _ 1 . 1 A - -	131.5	90S
14	103.68	739	3.57	29600	1 0 0		
12	116.55	831	3.44	29500	1 1 2		
11	128.66	919	3.11	29500	1 2 5		
10	145.2	1031	2.4	29413	1 4 0		
8.8	160.29	1135	2.17	29397	1 6 0		
6.1	231.06	1621	1.63	25710	M 0 9 4 1 2 2 5 _ M _ - _ _ 1 . 1 A - -	156.5	90S
5.5	258.09	1808	1.58	24951	2 5 0		
4.7	300.18	2103	1.36	24951	2 8 0		
4.2	335.85	2349	1.22	24951	3 0 0		
3.9	357.95	2506	1.14	24951	3 6 0		
3.3	424.23	2968	0.96	24951	4 0 0		
3	471.32	3293	0.87	24951	4 5 0		
2.8	503.22	3514	0.81	24951	5 0 0		
9	156.57	1109	3.76	49600	M 1 0 3 1 1 6 0 _ M _ - _ _ 1 . 1 A - -	179.5	90S
6.4	220.22	1536	2.87	41580	M 1 0 4 1 2 2 5 _ M _ - _ _ 1 . 1 A - -	217.5	90S
5.8	242.24	1689	2.61	41580	2 5 0		
5.1	278.36	1940	2.27	41580	2 8 0		
4.5	315.65	2198	2.01	41580	3 0 0		
4	348.16	2426	1.82	41580	3 6 0		
3.5	398.71	2776	1.59	41580	4 0 0		
3.2	443.06	3081	1.43	41580	4 5 0		
2.8	500.94	3481	1.27	41580	5 0 0		
2.4	580.78	4033	1.09	41580	6 5 0		
2	692.72	4804	0.92	41580	7 3 0		
5.6	249.68	1737	3.65	64632	M 1 3 4 1 2 5 0 _ M _ - _ _ 1 . 1 A - -	292.5	90S
4.9	286.9	1995	3.18	64632	2 8 0		
4.3	325.33	2260	2.81	64632	3 0 0		
3.9	358.84	2494	2.55	64632	3 6 0		
3.4	410.95	2854	2.22	64632	4 0 0		
3	463.22	3216	1.97	64632	4 5 0		
2.7	523.74	3633	1.75	64632	5 0 0		
2.3	607.22	4209	1.51	64632	6 5 0		
1.9	724.25	5013	1.27	64632	7 3 0		
1.6	858.69	5911	1.07	64632	8 6 0		
1.4	1024.19	7043	0.9	64632	1 0 C		
1.2	1140.7	7829	0.81	64632	1 1 C		
3.6	390.06	2713	3.91	80613	M 1 4 4 1 3 6 0 _ M _ - _ _ 1 . 1 A - -	408.5	90S
3.2	446.71	3105	3.41	80613	4 0 0		
2.9	492.49	3420	3.15	80613	4 5 0		
2.5	556.83	3864	2.79	80613	5 0 0		
2.2	645.58	4475	2.41	80613	6 5 0		
1.8	770.01	5330	2.02	80613	7 3 0		
1.8	801.52	5534	1.93	80613	8 6 0		
1.5	929.27	6410	1.66	80613	1 0 C		
1.3	1108.37	7636	1.4	80613	1 1 C		
1.2	1213.79	8356	1.28	80613	1 3 C		
0.94	1502.21	10314	0.98	80711	1 5 C		
0.78	1802.65	12351	0.82	80711	1 8 C		

NOTE

Other output speeds are available using 2 and 8 pole motors - Consult Textron Power Transmission

0205

1.1 kW

6 POLE

N2 R/MIN Output Speed	i Ratio	M2 Nm Output Torque	Fm Service Factor	N Overhung Load	Unit Designation Column Entry 1 Through 20 Spaces to be filled when entering order	Kg Weight of base mount unit	Motor Size
247	3.75	41	1.66	1500	M 0 1 2 2 3 . 6 _ M _ - _ _ 1 . 1 C - -	24.5	90L
183	5.07	55	1.36	1490	5 . 0		
161	5.76	63	1.24	1480	5 . 6		
142	6.53	72	1.11	1490	6 . 3		
111	8.35	91	0.93	1490	8 . 0		
103	9	98	0.88	1380	9 . 0		
258	3.59	39	2.92	4000	M 0 2 2 2 3 . 6 _ M _ - _ _ 1 . 1 C - -	27.5	90L
184	5.03	55	2.37	4000	5 . 0		
167	5.55	61	2.19	4000	5 . 6		
147	6.3	69	1.99	4000	6 . 3		
116	8	88	1.65	4000	8 . 0		
102	9.09	100	1.5	4000	9 . 0		
83	11.15	123	1.28	4000	1 1 .		
75	12.37	136	1.17	4000	1 2 .		
66	14.05	154	1.03	4000	1 4 .		
58	15.97	175	0.91	4000	1 6 .		
53	17.58	193	0.83	3680	1 8 .		
258	3.59	39	3.4	4000	M 0 3 2 2 3 . 6 _ M _ - _ _ 1 . 1 C - -	27.5	90L
184	5.03	55	2.77	4000	5 . 0		
167	5.55	61	2.6	4000	5 . 6		
147	6.3	69	2.4	4000	6 . 3		
116	8	88	2.07	4000	8 . 0		
102	9.09	99	1.9	4000	9 . 0		
83	11.15	122	1.66	4000	1 1 .		
75	12.37	136	1.53	4000	1 2 .		
66	14.05	154	1.35	4000	1 4 .		
58	15.97	175	1.19	4000	1 6 .		
53	17.58	193	1.08	3680	1 8 .		
46	20.23	222	0.94	2880	2 0 .		
42	21.99	241	0.87	2340	2 2 .		
74	12.54	137	2.36	6370	M 0 4 2 2 1 2 . _ M _ - _ _ 1 . 1 C - -	36.5	90L
63	14.58	160	2.1	6624	1 4 .		
57	16.31	179	1.88	6815	1 6 .		
53	17.39	191	1.76	6790	1 8 .		
45	20.61	226	1.49	6640	2 0 .		
42	22	242	1.39	6416	2 2 .		
34	27.3	299	1.13	5253	2 8 .		
29	32.19	354	0.95	5720	3 2 .		
26	35.25	386	0.87	5074	3 6 .		
744	1.24	13	3.19	1610	M 0 5 1 2 1 . 2 _ M _ - _ _ 1 . 1 C - -	23.5	90L
655	1.41	15	2.93	1620	1 . 4		
516	1.79	20	2.51	1620	1 . 8		
454	2.04	22	2.26	1630	2 . 0		
370	2.5	28	1.84	1660	2 . 5		
334	2.77	31	1.66	1650	2 . 8		
294	3.15	35	1.46	1650	3 . 2		
258	3.58	39	1.23	1710	3 . 6		
235	3.94	44	1.11	1610	4 . 0		
204	4.53	50	1.02	1500	4 . 5		
188	4.93	54	0.88	1430	5 . 0		
74	12.54	138	3.08	5876	M 0 5 2 2 1 2 . _ M _ - _ _ 1 . 1 C - -	37.5	90L
63	14.58	161	2.79	6072	1 4 .		
57	16.31	179	2.51	6216	1 6 .		
53	17.39	191	2.35	6477	1 8 .		
45	20.61	227	1.98	6346	2 0 .		
42	22	242	1.86	6103	2 2 .		
34	27.3	300	1.5	5173	2 8 .		
29	32.19	354	1.27	4327	3 2 .		
26	35.25	386	1.17	4327	3 6 .		
21	43.2	473	0.86	3343	4 5 .		
332	2.79	31	3.08	3270	M 0 6 1 2 2 . 8 _ M _ - _ _ 1 . 1 C - -	28.5	90L
285	3.24	36	3	3270	3 . 2		
255	3.62	40	2.82	3270	3 . 6		
239	3.86	43	2.72	3270	4 . 0		
202	4.58	51	2.29	3260	4 . 5		
189	4.89	54	2.15	3250	5 . 0		
152	6.07	67	1.74	3120	6 . 0		
129	7.15	79	1.48	2960	7 . 1		
118	7.83	87	1.35	2885	8 . 0		
51	18.05	199	3	7200	M 0 6 2 2 1 6 . _ M _ - _ _ 1 . 1 C - -	42.5	90L
46	20.2	222	2.81	7200	1 8 .		
43	21.53	237	2.64	7200	2 0 .		
36	25.51	281	2.22	7200	2 2 .		
34	27.24	300	2.08	7200	2 8 .		
27	33.8	372	1.68	7200	3 2 .		
23	39.86	438	1.43	6680	3 6 .		
21	43.64	479	1.31	6136	4 5 .		
17	53.49	585	0.93	7182	5 0 .		
181	5.12	57	3.83	6710	M 0 7 1 2 5 . 0 _ M _ - _ _ 1 . 1 C - -	35.5	90L
156	5.93	66	3.3	6796	6 . 0		
131	7.08	78	2.78	6871	7 . 1		
119	7.75	86	2.53	7027	8 . 0		

NOTE

Other output speeds are available using 2 and 8 pole motors - Consult Textron Power Transmission

1.1 kW

6 POLE

N2 R/MIN Output Speed	i Ratio	M2 Nm Output Torque	Fm Service Factor	N Overhung Load	Unit Designation Column Entry 1 Through 20 Spaces to be filled when entering order	Kg Weight of base mount unit	Motor Size
45	20.54	225	3.71	8987	M 0 7 2 2 2 0 . _ M _ - _ _ 1 . 1 C - -	49.5	90L
40	23.23	255	3.32	8888	2 2 .		
34	26.93	295	2.91	8888	2 8 .		
29	32.12	352	2.46	8405	3 2 .		
26	35.17	385	2.25	8405	3 6 .		
22	42.21	460	1.88	7755	4 5 .		
19	48.56	529	1.32	7370	5 0 .		
17	53.96	586	1.02	7823	5 6 .		
16	58.95	641	1.35	6840	M 0 7 3 2 5 6 . _ M _ - _ _ 1 . 1 C - -	54.5	90L
15	62.83	683	1.27	6240	6 3 .		
12	74.47	812	1.07	4470	7 1 .		
12	79.51	861	1.01	3701	8 0 .		
9.4	98.66	1070	0.81	3539	1 0 0		
21	44.38	486	3.39	20000	M 0 8 2 2 4 5 . _ M _ - _ _ 1 . 1 C - -	82.5	90L
19	48.46	530	3.11	20000	5 0 .		
17	55.8	608	2.55	18720	5 6 .		
15	60.33	654	2.52	20000	M 0 8 3 2 5 6 . _ M _ - _ _ 1 . 1 C - -	82.5	90L
14	66.02	716	2.3	18126	6 3 .		
12	74.69	811	2.03	17846	7 1 .		
11	84.31	914	1.8	17539	8 0 .		
9.1	102.2	1108	1.49	15510	1 0 0		
7.8	119.19	1290	1.28	14323	1 1 2		
7.1	130.92	1416	1.17	13333	1 2 5		
5.8	160.45	1744	0.95	11871	1 6 0		
5.3	175.21	1895	0.87	10117	1 8 0		
15	61.13	669	3.69	29600	M 0 9 2 1 6 3 . _ M _ - _ _ 1 . 1 C - -	123.5	90L
13	68.74	751	3.23	29600	7 1 .		
11	82.51	899	3.18	29500	M 0 9 3 1 8 0 . _ M _ - _ _ 1 . 1 C - -	132.5	90L
10	93.92	1021	2.58	29400	9 0 .		
8.9	103.68	1128	2.34	29300	1 0 0		
7.9	116.55	1270	2.25	29282	1 1 2		
7.2	128.66	1401	2.04	29258	1 2 5		
6.4	145.2	1575	1.57	29166	1 4 0		
5.8	160.29	1740	1.42	29033	1 6 0		
4	231.06	2475	1.07	25710	M 0 9 4 1 2 2 5 _ M _ - _ _ 1 . 1 C - -	157.5	90L
3.6	258.09	2761	1.03	24951	2 5 0		
3.1	300.18	3209	0.89	24951	2 8 0		
7.1	129.94	1410	3.13	49100	M 1 0 3 1 1 2 5 _ M _ - _ _ 1 . 1 C - -	180.5	90L
6.8	135.88	1473	2.83	49100	1 4 0		
5.9	156.57	1694	2.46	48700	1 6 0		
4.2	220.22	2346	1.88	41580	M 1 0 4 1 2 2 5 _ M _ - _ _ 1 . 1 C - -	218.5	90L
3.8	242.24	2580	1.71	41580	2 5 0		
3.3	278.36	2963	1.49	41580	2 8 0		
2.9	315.65	3355	1.32	41580	3 0 0		
2.7	348.16	3702	1.19	41580	3 6 0		
2.3	398.71	4237	1.04	41580	4 0 0		
2.1	443.06	4703	0.94	41580	4 5 0		
1.8	500.94	5312	0.83	41580	5 0 0		
4.1	226.98	2411	2.63	64632	M 1 3 4 1 2 2 5 _ M _ - _ _ 1 . 1 C - -	293.5	90L
3.7	249.68	2652	2.39	64632	2 5 0		
3.2	286.9	3045	2.08	64632	2 8 0		
2.8	325.33	3448	1.84	64632	3 0 0		
2.6	358.84	3805	1.67	64632	3 6 0		
2.3	410.95	4354	1.46	64632	4 0 0		
2	463.22	4906	1.29	64632	4 5 0		
1.8	523.74	5542	1.15	64632	5 0 0		
1.5	607.22	6418	0.99	64632	6 5 0		
1.3	724.25	7643	0.83	64632	7 3 0		
3.4	271.4	2884	3.67	80613	M 1 4 4 1 2 5 0 _ M _ - _ _ 1 . 1 C - -	409.5	90L
3	311.86	3311	3.2	80613	2 8 0		
2.6	353.64	3749	2.83	80613	3 0 0		
2.4	390.06	4137	2.56	80613	3 6 0		
2.1	446.71	4734	2.24	80613	4 0 0		
1.9	492.49	5215	2.07	80613	4 5 0		
1.7	556.83	5891	1.83	80613	5 0 0		
1.4	645.58	6822	1.58	80613	6 5 0		
1.2	770.01	8123	1.33	80613	7 3 0		
1.2	801.52	8442	1.26	80613	8 6 0		
0	929.27	9777	1.09	80613	1 0 C		
0.83	1108.37	11643	0.92	80613	1 1 C		
0.76	1213.79	12739	0.84	80613	1 3 C		

NOTE

Other output speeds are available using 2 and 8 pole motors - Consult Textron Power Transmission

1.5 kW

4 POLE

N2 R/MIN Output Speed	i Ratio	M2 Nm Output Torque	Fm Service Factor	N Overhung Load	Unit Designation Column Entry 1 Through 20 Spaces to be filled when entering order	Kg Weight of base mount unit	Motor Size
379	3.75	36	1.63	1484	M 0 1 2 2 3 . 6 _ M _ - _ _ 1 . 5 A - -	24.5	90L
280	5.07	49	1.36	1517	5 . 0		
246	5.76	56	1.27	1521	5 . 6		
218	6.53	63	1.18	1340	6 . 3		
170	8.35	81	0.97	1280	8 . 0		
158	9	88	0.91	1270	9 . 0		
396	3.59	34	2.87	3728	M 0 2 2 2 3 . 6 _ M _ - _ _ 1 . 5 A - -	27.5	90L
282	5.03	49	2.36	3917	5 . 0		
256	5.55	54	2.23	3967	5 . 6		
225	6.3	61	2.06	3984	6 . 3		
178	8	78	1.74	4000	8 . 0		
156	9.09	88	1.57	4000	9 . 0		
127	11.15	108	1.33	4000	1 1 .		
115	12.37	120	1.23	4000	1 2 .		
101	14.05	137	1.12	4000	1 4 .		
89	15.97	156	1.03	3850	1 6 .		
81	17.58	171	0.93	3640	1 8 .		
70	20.23	197	0.81	3280	2 0 .		
396	3.59	34	3.38	3690	M 0 3 2 2 3 . 6 _ M _ - _ _ 1 . 5 A - -	27.5	90L
282	5.03	48	2.76	3898	5 . 0		
256	5.55	54	2.59	3948	5 . 6		
225	6.3	61	2.4	3982	6 . 3		
178	8	78	2.06	4000	8 . 0		
156	9.09	89	1.89	4000	9 . 0		
127	11.15	108	1.65	4000	1 1 .		
115	12.37	120	1.54	4000	1 2 .		
101	14.05	137	1.41	4000	1 4 .		
89	15.97	155	1.32	3901	1 6 .		
81	17.58	171	1.21	3764	1 8 .		
70	20.23	197	1.06	3280	2 0 .		
65	21.99	214	0.97	3000	2 2 .		
54	26.4	256	0.82	1789	2 8 .		
113	12.54	122	2.31	5611	M 0 4 2 2 1 2 . _ M _ - _ _ 1 . 5 A - -	36.5	90L
97	14.58	142	2.07	5814	1 4 .		
87	16.31	159	1.92	5915	1 6 .		
82	17.39	170	1.83	6000	1 8 .		
69	20.61	201	1.59	6240	2 0 .		
65	22	215	1.5	6333	2 2 .		
52	27.3	265	1.26	6499	2 8 .		
44	32.19	313	1.08	6840	3 2 .		
40	35.25	342	0.99	6950	3 6 .		
33	43.2	420	0.8	6110	4 5 .		
1142	1.24	12	3.13	1450	M 0 5 1 2 1 . 2 _ M _ - _ _ 1 . 5 A - -	23.5	90L
1006	1.41	14	2.88	1490	1 . 4		
792	1.79	17	2.47	1597	1 . 8		
697	2.04	20	2.31	1607	2 . 0		
568	2.5	24	2.07	1623	2 . 5		
512	2.77	27	1.87	1616	2 . 8		
451	3.15	31	1.49	1655	3 . 2		
397	3.58	35	1.36	1741	3 . 6		
360	3.94	39	1.25	1705	4 . 0		
313	4.53	45	1.12	1655	4 . 5		
288	4.93	48	0.99	1360	5 . 0		
240	5.92	58	0.87	1190	6 . 0		
113	12.54	122	3.47	5158	M 0 5 2 2 1 2 . _ M _ - _ _ 1 . 5 A - -	37.5	90L
97	14.58	143	3.15	5238	1 4 .		
87	16.31	159	2.82	5630	1 6 .		
82	17.39	170	2.64	5710	1 8 .		
69	20.61	201	2.23	5869	2 0 .		
65	22	215	2.09	5651	2 2 .		
52	27.3	267	1.68	5575	2 8 .		
44	32.19	314	1.43	5658	3 2 .		
40	35.25	342	1.31	5153	3 6 .		
33	43.2	420	0.84	5610	4 5 .		
510	2.79	27	3.47	3280	M 0 6 1 2 2 . 8 _ M _ - _ _ 1 . 5 A - -	28.5	90L
438	3.24	32	3.37	3270	3 . 2		
392	3.62	36	3.17	3275	3 . 6		
368	3.86	38	3.07	3267	4 . 0		
310	4.58	45	2.59	3245	4 . 5		
290	4.89	48	2.43	3190	5 . 0		
234	6.07	60	1.96	3076	6 . 0		
198	7.15	70	1.66	3247	7 . 1		
181	7.83	77	1.52	3187	8 . 0		
79	18.05	176	3.37	7200	M 0 6 2 2 1 6 . _ M _ - _ _ 1 . 5 A - -	42.5	90L
70	20.2	197	3.17	7200	1 8 .		
66	21.53	210	2.97	7200	2 0 .		
56	25.51	249	2.51	7200	2 2 .		
52	27.24	266	2.35	7200	2 8 .		
42	33.8	330	1.89	7200	3 2 .		
36	39.86	388	1.61	7200	3 6 .		
33	43.64	426	1.47	7200	4 5 .		
27	53.49	519	1.01	7200	5 0 .		
24	59.61	580	0.81	7200	5 6 .		
20	72.28	694	0.9	7200	M 0 6 3 2 6 3 . _ M _ - _ _ 1 . 5 A - -	43.5	90L

NOTE

Other output speeds are available using 2 and 8 pole motors - Consult Textron Power Transmission

0205

1.5 kW

4 POLE

N2 R/MIN Output Speed	i Ratio	M2 Nm Output Torque	Fm Service Factor	N Overhung Load	Unit Designation Column Entry 1 Through 20 Spaces to be filled when entering order	Kg Weight of base mount unit	Motor Size
239	5.93	58	3.72	6324	M 0 7 1 2 6 . 0 _ M _ - _ _ 1 . 5 A - -	35.5	90L
201	7.08	70	3.12	6467	7 . 1		
183	7.75	76	2.85	6521	8 . 0		
61	23.23	226	3.59	9013	M 0 7 2 2 2 2 . _ M _ - _ _ 1 . 5 A - -	49.5	90L
53	26.93	262	3.14	8800	2 8 .		
44	32.12	313	2.68	8966	3 2 .		
40	35.17	342	2.47	8670	3 6 .		
34	42.21	409	2.11	8583	4 5 .		
29	48.56	470	1.49	8708	5 0 .		
26	53.96	521	1.14	10000	5 6 .		
24	58.95	568	1.33	7426	M 0 7 3 2 5 6 . _ M _ - _ _ 1 . 5 A - -	54.5	90L
23	62.83	604	1.27	6908	6 3 .		
19	74.47	717	1.14	7410	7 1 .		
18	79.51	764	1.09	6620	8 0 .		
14	98.66	949	0.91	3640	1 0 0		
32	44.38	432	3.82	20000	M 0 8 2 2 4 5 . _ M _ - _ _ 1 . 5 A - -	82.5	90L
29	48.46	471	3.5	20000	5 0 .		
25	55.8	541	2.85	19737	5 6 .		
24	60.33	579	2.76	19600	M 0 8 3 2 5 6 . _ M _ - _ _ 1 . 5 A - -	82.5	90L
22	66.02	636	2.59	19310	6 3 .		
19	74.69	717	2.3	18882	7 1 .		
17	84.31	810	2.04	19178	8 0 .		
14	102.2	983	1.68	17066	1 0 0		
12	119.19	1143	1.44	16851	1 1 2		
11	130.92	1257	1.31	15494	1 2 5		
8.9	160.45	1541	1.07	17200	1 6 0		
8.1	175.21	1684	0.98	15200	1 8 0		
7	201.75	1929	0.86	11700	2 0 0		
26	55.18	536	3.75	29700	M 0 9 2 1 5 6 . _ M _ - _ _ 1 . 5 A - -	123.5	90L
21	68.74	668	3.7	29600	7 1 .		
17	82.51	797	3.58	29600	M 0 9 3 1 8 0 . _ M _ - _ _ 1 . 5 A - -	132.5	90L
15	93.92	906	2.91	29462	9 0 .		
14	103.68	1000	2.64	29434	1 0 0		
12	116.55	1126	2.54	29348	1 1 2		
11	128.66	1244	2.3	29320	1 2 5		
10	145.2	1396	1.77	29200	1 4 0		
8.9	160.29	1537	1.61	29166	1 6 0		
6.1	231.06	2195	1.2	25710	M 0 9 4 1 2 2 5 _ M _ - _ _ 1 . 5 A - -	157.5	90L
5.5	258.09	2449	1.17	24951	2 5 0		
4.7	300.18	2847	1	24951	2 8 0		
4.2	335.85	3181	0.9	24951	3 0 0		
4	357.95	3393	0.84	24951	3 6 0		
13	109.97	1059	3.56	49600	M 1 0 3 1 1 0 0 _ M _ - _ _ 1 . 5 A - -	180.5	90L
11	129.94	1250	3.53	49300	1 2 5		
10	135.88	1303	3.19	49300	1 4 0		
9.1	156.57	1502	2.77	48965	1 6 0		
6.4	220.22	2080	2.12	41580	M 1 0 4 1 2 2 5 _ M _ - _ _ 1 . 5 A - -	218.5	90L
5.9	242.24	2287	1.93	41580	2 5 0		
5.1	278.36	2628	1.68	41580	2 8 0		
4.5	315.65	2976	1.48	41580	3 0 0		
4.1	348.16	3284	1.34	41580	3 6 0		
3.6	398.71	3760	1.17	41580	4 0 0		
3.2	443.06	4172	1.06	41580	4 5 0		
2.8	500.94	4714	0.94	41580	5 0 0		
2.4	580.78	5461	0.81	41580	6 5 0		
6.3	226.98	2139	2.97	64632	M 1 3 4 1 2 2 5 _ M _ - _ _ 1 . 5 A - -	293.5	90L
5.7	249.68	2352	2.7	64632	2 5 0		
4.9	286.9	2702	2.35	64632	2 8 0		
4.4	325.33	3060	2.07	64632	3 0 0		
4	358.84	3377	1.88	64632	3 6 0		
3.5	410.95	3865	1.64	64632	4 0 0		
3.1	463.22	4355	1.46	64632	4 5 0		
2.7	523.74	4920	1.29	64632	5 0 0		
2.3	607.22	5699	1.11	64632	6 5 0		
2	724.25	6788	0.94	64632	7 3 0		
4.6	311.86	2940	3.6	80613	M 1 4 4 1 2 8 0 _ M _ - _ _ 1 . 5 A - -	409.5	90L
4	353.64	3329	3.18	80613	3 0 0		
3.6	390.06	3673	2.88	80613	3 6 0		
3.2	446.71	4204	2.52	80613	4 0 0		
2.9	492.49	4631	2.33	80613	4 5 0		
2.6	556.83	5232	2.06	80613	5 0 0		
2.2	645.58	6059	1.78	80613	6 5 0		
1.8	770.01	7217	1.49	80613	7 3 0		
1.8	801.52	7494	1.42	80613	8 6 0		
1.5	929.27	8680	1.23	80613	1 0 C		
1.3	1108.37	10340	1.03	80613	1 1 C		
1.2	1213.79	11314	0.94	80613	1 3 C		

NOTE

Other output speeds are available using 2 and 8 pole motors - Consult Textron Power Transmission

1.5 kW

6 POLE

N2 R/MIN Output Speed	i Ratio	M2 Nm Output Torque	Fm Service Factor	N Overhung Load	Unit Designation Column Entry 1 Through 20 Spaces to be filled when entering order	Kg Weight of base mount unit	Motor Size
184	5.04	75	3.59	5180	M 0 4 2 2 5 . 0 _ M _ - _ _ 1 . 5 C - -	49	100L
164	5.65	85	3.36	5270	5 . 6		
146	6.34	95	3.08	5360	6 . 3		
115	8.05	120	2.56	5530	8 . 0		
101	9.13	137	2.32	5670	9 . 0		
85	10.89	163	2.04	5920	1 1 .		
74	12.54	188	1.73	6119	1 2 .		
63	14.58	219	1.54	6331	1 4 .		
57	16.31	244	1.38	6489	1 6 .		
53	17.39	261	1.29	6491	1 8 .		
45	20.61	309	1.09	6232	2 0 .		
42	22	330	1.02	5846	2 2 .		
34	27.3	407	0.83	4186	2 8 .		
115	8.05	121	3.71	5060	M 0 5 2 2 8 . 0 _ M _ - _ _ 1 . 5 C - -	49	100L
101	9.13	137	3.27	5460	9 . 0		
85	10.89	164	2.74	5700	1 1 .		
74	12.54	188	2.26	5732	1 2 .		
63	14.58	219	2.05	5904	1 4 .		
57	16.31	244	1.84	6028	1 6 .		
53	17.39	261	1.72	6212	1 8 .		
45	20.61	309	1.45	5878	2 0 .		
42	22	330	1.36	5501	2 2 .		
34	27.3	409	1.1	4063	2 8 .		
29	32.19	483	0.93	2754	3 2 .		
26	35.25	526	0.85	2754	3 6 .		
456	2.03	31	3.46	3270	M 0 6 1 2 2 . 0 _ M _ - _ _ 1 . 5 C - -	40	100L
382	2.42	36	2.97	3270	2 . 5		
332	2.79	42	2.26	3266	2 . 8		
285	3.24	49	2.2	3262	3 . 2		
255	3.62	55	2.07	3259	3 . 6		
239	3.86	59	2	3259	4 . 0		
202	4.58	70	1.68	3249	4 . 5		
189	4.89	74	1.58	3228	5 . 0		
152	6.07	92	1.28	3010	6 . 0		
129	7.15	108	1.09	2786	7 . 1		
118	7.83	119	0.99	2668	8 . 0		
69	13.48	203	3.08	7200	M 0 6 2 2 1 2 . _ M _ - _ _ 1 . 5 C - -	54	100L
60	15.52	233	2.26	7200	1 4 .		
51	18.05	271	2.2	7200	1 6 .		
46	20.2	303	2.06	7200	1 8 .		
43	21.53	323	1.93	7200	2 0 .		
36	25.51	383	1.63	7200	2 2 .		
34	27.24	409	1.53	7200	2 8 .		
27	33.8	507	1.23	7200	3 2 .		
23	39.86	597	1.05	6301	3 6 .		
21	43.64	654	0.96	5363	4 5 .		
234	3.95	60	3.63	6266	M 0 7 1 2 4 . 0 _ M _ - _ _ 1 . 5 C - -	48	100L
204	4.53	69	3.17	6348	4 . 5		
181	5.12	78	2.81	6390	5 . 0		
156	5.93	90	2.42	6494	6 . 0		
131	7.08	107	2.04	6495	7 . 1		
119	7.75	117	1.86	6691	8 . 0		
64	14.34	215	3.75	8921	M 0 7 2 2 1 4 . _ M _ - _ _ 1 . 5 C - -	62	100L
57	16.26	243	3.35	8727	1 6 .		
52	17.94	269	3.06	8543	1 8 .		
45	20.54	308	2.72	8251	2 0 .		
40	23.23	347	2.43	8080	2 2 .		
34	26.93	403	2.13	8080	2 8 .		
29	32.12	480	1.81	7246	3 2 .		
26	35.17	525	1.65	7246	3 6 .		
22	42.21	628	1.38	6122	4 5 .		
19	48.56	722	0.97	5457	5 0 .		
16	58.95	874	0.99	5110	M 0 7 3 2 5 6 . _ M _ - _ _ 1 . 5 C - -	66	100L
15	62.83	931	0.93	4180	6 3 .		
151	6.12	93	3.94	8463	M 0 8 1 2 6 . 0 _ M _ - _ _ 1 . 5 C - -	62	100L
130	7.14	108	3.5	8584	7 . 1		
118	7.85	119	3.25	8644	8 . 0		
28	32.97	493	3.35	20000	M 0 8 2 2 3 2 . _ M _ - _ _ 1 . 5 C - -	94	100L
26	36.21	541	3.04	20000	3 6 .		
21	44.38	663	2.49	18642	4 5 .		
19	48.46	723	2.28	18360	5 0 .		
17	55.8	829	1.87	17258	5 6 .		
15	60.33	891	1.85	18038	M 0 8 3 2 5 6 . _ M _ - _ _ 1 . 5 C - -	95	100L
14	66.02	976	1.69	15984	6 3 .		
12	74.69	1107	1.49	15384	7 1 .		
11	84.31	1246	1.32	14726	8 0 .		
9.1	102.2	1510	1.09	12244	1 0 0		
7.8	119.19	1759	0.94	10194	1 1 2		
7.1	130.92	1931	0.85	8484	1 2 5		

NOTE

Other output speeds are available using 2 and 8 pole motors - Consult Textron Power Transmission

1.5 kW

6 POLE

N2 R/MIN	i	M2 Nm	Fm	N	Unit Designation	Kg	
Output Speed	Ratio	Output Torque	Service Factor	Overhung Load	Column Entry 1 Through 20 Spaces to be filled when entering order	Weight of base mount unit	Motor Size
17	55.18	822	2.37	29600	M 0 9 2 1 5 6 . _ M _ - _ _ 1 . 5 C - -	135	100L
15	61.13	913	2.7	29472	6 3 .		
13	68.74	1025	2.37	29372	7 1 .		
15	59.85	889	2.97	29500	M 0 9 3 1 5 6 . _ M _ - _ _ 1 . 5 C - -	144	100L
14	66.49	987	2.67	29400	6 3 .		
12	74.26	1104	2.59	29400	7 1 .		
11	82.51	1226	2.33	29318	8 0 .		
10	93.92	1393	1.89	29181	9 0 .		
8.9	103.68	1539	1.72	29081	1 0 0		
7.9	116.55	1732	1.65	29034	1 1 2		
7.2	128.66	1910	1.5	28982	1 2 5		
6.4	145.2	2148	1.15	28851	1 4 0		
5.8	160.29	2373	1.04	28693	1 6 0		
10	95.44	1414	2.67	49000	M 1 0 3 1 9 0 . _ M _ - _ _ 1 . 5 C - -	193	100L
8.4	109.97	1630	2.31	48700	1 0 0		
8.2	112.77	1670	2.64	48700	1 1 2		
7.1	129.94	1923	2.29	48200	1 2 5		
6.8	135.88	2009	2.07	48136	1 4 0		
5.9	156.57	2310	1.81	47734	1 6 0		
4.2	220.22	3199	1.38	41580	M 1 0 4 1 2 2 5 _ M _ - _ _ 1 . 5 C - -	230	100L
3.8	242.24	3518	1.25	41580	2 5 0		
3.3	278.36	4040	1.09	41580	2 8 0		
2.9	315.65	4575	0.96	41580	3 0 0		
2.7	348.16	5049	0.87	41580	3 6 0		
7.3	126.62	1858	3.42	66800	M 1 3 3 1 1 2 5 _ M _ - _ _ 1 . 5 C - -	263	100L
6.7	139.07	2035	3.17	66700	1 4 0		
6	154.89	2265	2.85	66700	1 6 0		
5.3	173.37	2547	2.49	66600	1 8 0		
5	184.46	2715	2.34	66500	2 0 0		
4.4	212.09	3113	2.07	66400	2 2 5		
4.1	226.98	3288	1.93	64632	M 1 3 4 1 2 2 5 _ M _ - _ _ 1 . 5 C - -	305	100L
3.7	249.68	3616	1.76	64632	2 5 0		
3.2	286.9	4153	1.53	64632	2 8 0		
2.8	325.33	4702	1.35	64632	3 0 0		
2.6	358.84	5188	1.22	64632	3 6 0		
2.3	410.95	5937	1.07	64632	4 0 0		
2	463.22	6691	0.95	64632	4 5 0		
1.8	523.74	7558	0.84	64632	5 0 0		
4.4	211.96	3101	3.26	80900	M 1 4 3 1 2 2 5 _ M _ - _ _ 1 . 5 C - -	392	100L
3.7	246.73	3576	2.96	80613	M 1 4 4 1 2 2 5 _ M _ - _ _ 1 . 5 C - -	421	100L
3.4	271.4	3932	2.69	80613	2 5 0		
3	311.86	4516	2.35	80613	2 8 0		
2.6	353.64	5112	2.07	80613	3 0 0		
2.4	390.06	5641	1.88	80613	3 6 0		
2.1	446.71	6455	1.64	80613	4 0 0		
1.9	492.49	7112	1.51	80613	4 5 0		
1.7	556.83	8034	1.34	80613	5 0 0		
1.4	645.58	9302	1.16	80613	6 5 0		
1.2	770.01	11077	0.97	80613	7 3 0		
1.2	801.52	11512	0.93	80613	8 6 0		

NOTE

Other output speeds are available using 2 and 8 pole motors - Consult Textron Power Transmission

2.2 kW

4 POLE

N2 R/MIN Output Speed	i Ratio	M2 Nm Output Torque	Fm Service Factor	N Overhung Load	Unit Designation Column Entry 1 Through 20 Spaces to be filled when entering order	Kg Weight of base mount unit	Motor Size
379	3.75	53	1.11	1380	M 0 1 2 2 3 . 6 _ M _ - _ _ 2 . 2 K - -	30	90LA
280	5.07	72	0.93	1380	5 . 0		
246	5.76	82	0.87	1360	5 . 6		
396	3.59	51	1.95	3690	M 0 2 2 2 3 . 6 _ M _ - _ _ 2 . 2 K - -	33	90LA
282	5.03	72	1.61	3860	5 . 0		
256	5.55	79	1.52	3910	5 . 6		
225	6.3	90	1.41	3970	6 . 3		
178	8	114	1.19	4000	8 . 0		
156	9.09	130	1.07	4000	9 . 0		
127	11.15	159	0.91	4000	1 1 .		
115	12.37	176	0.84	4000	1 2 .		
396	3.59	51	2.31	3690	M 0 3 2 2 3 . 6 _ M _ - _ _ 2 . 2 K - -	33	90LA
282	5.03	71	1.88	3860	5 . 0		
256	5.55	79	1.77	3910	5 . 6		
225	6.3	89	1.63	3970	6 . 3		
178	8	114	1.4	4000	8 . 0		
156	9.09	130	1.29	4000	9 . 0		
127	11.15	159	1.12	4000	1 1 .		
115	12.37	177	1.05	4000	1 2 .		
101	14.05	201	0.96	4000	1 4 .		
89	15.97	227	0.9	3850	1 6 .		
81	17.58	251	0.83	3640	1 8 .		
398	3.58	51	3.96	4526	M 0 4 2 2 3 . 6 _ M _ - _ _ 2 . 2 A - -	49	100L
283	5.04	71	3.29	4718	5 . 0		
252	5.65	80	3.09	4800	5 . 6		
225	6.34	90	2.89	4881	6 . 3		
177	8.05	115	2.51	5024	8 . 0		
156	9.13	130	2.29	5095	9 . 0		
131	10.89	156	1.99	5179	1 1 .		
114	12.54	178	1.58	5420	1 2 .		
98	14.58	208	1.42	5594	1 4 .		
87	16.31	232	1.31	5539	1 6 .		
82	17.39	248	1.25	5598	1 8 .		
69	20.61	293	1.09	5764	2 0 .		
65	22	314	1.03	5822	2 2 .		
52	27.3	388	0.86	5983	2 8 .		
113	12.54	179	1.58	5420	M 0 4 2 2 1 2 . _ M _ - _ _ 2 . 2 K - -	42	90LA
97	14.58	209	1.41	5594	1 4 .		
87	16.31	233	1.31	5539	1 6 .		
82	17.39	249	1.25	5598	1 8 .		
69	20.61	294	1.08	5764	2 0 .		
65	22	315	1.02	5822	2 2 .		
52	27.3	389	0.86	5983	2 8 .		
1142	1.24	18	2.13	1450	M 0 5 1 2 1 . 2 _ M _ - _ _ 2 . 2 K - -	29	90LA
1006	1.41	20	1.96	1490	1 . 4		
792	1.79	26	1.68	1540	1 . 8		
697	2.04	29	1.58	1550	2 . 0		
568	2.5	36	1.41	1560	2 . 5		
512	2.77	40	1.27	1540	2 . 8		
451	3.15	46	1.01	1540	3 . 2		
397	3.58	52	0.93	1590	3 . 6		
360	3.94	57	0.85	1520	4 . 0		
177	8.05	115	3.9	4843	M 0 5 2 2 8 . 0 _ M _ - _ _ 2 . 2 A - -	49	100L
156	9.13	130	3.44	4915	9 . 0		
131	10.89	156	2.88	4998	1 1 .		
114	12.54	179	2.37	5016	1 2 .		
98	14.58	208	2.15	5016	1 4 .		
87	16.31	233	1.93	5431	1 6 .		
82	17.39	248	1.81	5497	1 8 .		
69	20.61	294	1.53	5567	2 0 .		
65	22	314	1.43	5113	2 2 .		
52	27.3	390	1.15	4504	2 8 .		
44	32.19	459	0.98	4522	3 2 .		
40	35.25	501	0.9	3645	3 6 .		
113	12.54	180	2.36	5016	M 0 5 2 2 1 2 . _ M _ - _ _ 2 . 2 K - -	43	90LA
97	14.58	209	2.15	5016	1 4 .		
87	16.31	234	1.92	5431	1 6 .		
82	17.39	249	1.8	5497	1 8 .		
69	20.61	295	1.52	5567	2 0 .		
65	22	315	1.42	5113	2 2 .		
52	27.3	391	1.15	4504	2 8 .		
44	32.19	461	0.97	4522	3 2 .		
40	35.25	502	0.89	3645	3 6 .		
702	2.03	29	3.64	3278	M 0 6 1 2 2 . 0 _ M _ - _ _ 2 . 2 A - -	40	100L
589	2.42	35	3.13	3278	2 . 5		
512	2.79	40	2.37	3217	2 . 8		
440	3.24	47	2.31	3175	3 . 2		
393	3.62	52	2.17	3268	3 . 6		
369	3.86	56	2.1	3245	4 . 0		
311	4.58	66	1.77	3201	4 . 5		
291	4.89	71	1.66	3106	5 . 0		
235	6.07	88	1.34	2896	6 . 0		
199	7.15	103	1.14	3223	7 . 1		
182	7.83	113	1.04	3119	8 . 0		
510	2.79	40	2.36	3217	M 0 6 1 2 2 . 8 _ M _ - _ _ 2 . 2 K - -	34	90LA
438	3.24	47	2.3	3175	3 . 2		
392	3.62	53	2.16	3268	3 . 6		
368	3.86	56	2.09	3245	4 . 0		
310	4.58	66	1.76	3201	4 . 5		
290	4.89	71	1.66	3106	5 . 0		
234	6.07	88	1.34	2896	6 . 0		
198	7.15	103	1.14	3223	7 . 1		
181	7.83	113	1.04	3119	8 . 0		

NOTE

Other output speeds are available using 2 and 8 pole motors - Consult Textron Power Transmission

2.2 kW

4 POLE

N2 R/MIN Output Speed	i Ratio	M2 Nm Output Torque	Fm Service Factor	N Overhung Load	Unit Designation Column Entry 1 Through 20 Spaces to be filled when entering order	Kg Weight of base mount unit	Motor Size
106	13.48	193	3.18	7200	M 0 6 2 2 1 2 . _ M _ - _ _ 2 . 2 A - -	54	100L
92	15.52	222	2.37	7200	1 4 .		
79	18.05	258	2.31	7200	1 6 .		
71	20.2	288	2.17	7200	1 8 .		
66	21.53	307	2.03	7200	2 0 .		
56	25.51	364	1.72	7200	2 2 .		
52	27.24	389	1.61	7200	2 8 .		
42	33.8	483	1.3	7200	3 2 .		
36	39.86	567	1.1	7200	3 6 .		
33	43.64	622	1.01	7200	4 5 .		
79	18.05	259	2.3	7200	M 0 6 2 2 1 6 . _ M _ - _ _ 2 . 2 K - -	48	90LA
70	20.2	289	2.16	7200	1 8 .		
66	21.53	309	2.03	7200	2 0 .		
56	25.51	366	1.71	7200	2 2 .		
52	27.24	390	1.6	7200	2 8 .		
42	33.8	484	1.29	7200	3 2 .		
36	39.86	569	1.1	7200	3 6 .		
33	43.64	625	1	7200	4 5 .		
361	3.95	57	3.81	5814	M 0 7 1 2 4 . 0 _ M _ - _ _ 2 . 2 A - -	48	100L
315	4.53	65	3.33	5892	4 . 5		
278	5.12	74	2.95	5932	5 . 0		
240	5.93	86	2.55	6018	6 . 0		
201	7.08	102	2.14	6112	7 . 1		
184	7.75	112	1.95	6137	8 . 0		
359	3.95	57	3.8	5814	M 0 7 1 2 4 . 0 _ M _ - _ _ 2 . 2 K - -	41	90LA
314	4.53	65	3.32	5892	4 . 5		
277	5.12	74	2.94	5932	5 . 0		
239	5.93	86	2.54	6018	6 . 0		
201	7.08	102	2.13	6112	7 . 1		
183	7.75	112	1.95	6137	8 . 0		
99	14.34	205	3.69	8331	M 0 7 2 2 1 4 . _ M _ - _ _ 2 . 2 A - -	62	100L
88	16.26	232	3.39	8633	1 6 .		
79	17.94	256	3.1	9020	1 8 .		
69	20.54	293	2.74	8833	2 0 .		
61	23.23	330	2.46	8092	2 2 .		
53	26.93	383	2.15	7680	2 8 .		
44	32.12	457	1.84	8001	3 2 .		
41	35.17	500	1.69	7430	3 6 .		
34	42.21	598	1.44	7261	4 5 .		
29	48.56	687	1.02	7502	5 0 .		
99	14.34	205	3.68	8331	M 0 7 2 2 1 4 . _ M _ - _ _ 2 . 2 K - -	55	90LA
87	16.26	232	3.37	8633	1 6 .		
79	17.94	257	3.08	9020	1 8 .		
69	20.54	294	2.73	8833	2 0 .		
61	23.23	332	2.45	8092	2 2 .		
53	26.93	385	2.14	7680	2 8 .		
44	32.12	459	1.83	8001	3 2 .		
40	35.17	502	1.69	7430	3 6 .		
34	42.21	600	1.44	7261	4 5 .		
29	48.56	689	1.01	7502	5 0 .		
24	58.95	834	0.9	5530	M 0 7 3 2 5 6 . _ M _ - _ _ 2 . 2 K - -	60	90LA
23	62.83	887	0.87	4630	6 3 .		
233	6.12	89	3.65	7792	M 0 8 1 2 6 . 0 _ M _ - _ _ 2 . 2 A - -	62	100L
200	7.14	103	3.2	7928	7 . 1		
182	7.85	113	2.98	8020	8 . 0		
43	32.97	469	3.47	20190	M 0 8 2 2 3 2 . _ M _ - _ _ 2 . 2 A - -	94	100L
39	36.21	515	3.2	20215	3 6 .		
32	44.38	631	2.61	18821	4 5 .		
29	48.46	689	2.39	18617	5 0 .		
26	55.8	790	1.95	19279	5 6 .		
24	60.33	846	1.89	18900	M 0 8 3 2 5 6 . _ M _ - _ _ 2 . 2 A - -	95	100L
22	66.02	930	1.77	18103	6 3 .		
19	74.69	1049	1.57	16927	7 1 .		
17	84.31	1183	1.39	17742	8 0 .		
14	102.2	1437	1.15	14328	1 0 0		
12	119.19	1671	0.99	14531	1 1 2		
11	130.92	1837	0.9	12174	1 2 5		
24	60.33	849	1.88	18900	M 0 8 3 2 5 6 . _ M _ - _ _ 2 . 2 K - -	88	90LA
22	66.02	933	1.77	18103	6 3 .		
19	74.69	1053	1.57	16927	7 1 .		
17	84.31	1188	1.39	17742	8 0 .		
14	102.2	1442	1.14	14328	1 0 0		
12	119.19	1677	0.98	14531	1 1 2		
11	130.92	1844	0.89	12174	1 2 5		
32	44.44	634	3.89	29615	M 0 9 2 1 4 5 . _ M _ - _ _ 2 . 2 A - -	135	100L
29	49.07	699	3.46	29617	5 0 .		
26	55.18	783	2.56	29563	5 6 .		
23	61.13	870	2.84	29546	6 3 .		
21	68.74	976	2.53	29429	7 1 .		

NOTE

Other output speeds are available using 2 and 8 pole motors - Consult Textron Power Transmission

2.2 kW

4 POLE

N2 R/MIN Output Speed	i Ratio	M2 Nm Output Torque	Fm Service Factor	N Overhung Load	Unit Designation Column Entry 1 Through 20 Spaces to be filled when entering order	Kg Weight of base mount unit	Motor Size
24	59.85	847	3.06	29523	M 0 9 3 1 5 6 . _ M _ - _ _ 2 . 2 A - -	144	100L
21	66.49	939	2.81	29423	6 3 .		
19	74.26	1049	2.72	29429	7 1 .		
17	82.51	1166	2.45	29376	8 0 .		
15	93.92	1325	1.99	29220	9 0 .		
14	103.68	1462	1.8	29144	1 0 0		
12	116.55	1645	1.74	29082	1 1 2		
11	128.66	1818	1.57	29006	1 2 5		
10	145.2	2040	1.21	28826	1 4 0		
8.9	160.29	2247	1.1	28762	1 6 0		
6.1	231.06	3220	0.82	25710	M 0 9 4 1 2 2 5 _ M _ - _ _ 2 . 2 K - -	163	90LA
18	79.08	1112	3.96	49582	M 1 0 3 1 8 0 . _ M _ - _ _ 2 . 2 A - -	193	100L
15	95.44	1346	2.8	49101	9 0 .		
13	109.97	1548	2.43	48771	1 0 0		
13	112.77	1587	2.78	48771	1 1 2		
11	129.94	1828	2.41	48360	1 2 5		
10	135.88	1904	2.18	48326	1 4 0		
9.1	156.57	2196	1.9	47855	1 6 0		
6.5	220.22	3040	1.45	41580	M 1 0 4 1 2 2 5 _ M _ - _ _ 2 . 2 A - -	230	100L
5.9	242.24	3343	1.32	41580	2 5 0		
5.1	278.36	3841	1.15	41580	2 8 0		
4.5	315.65	4349	1.01	41580	3 0 0		
4.1	348.16	4800	0.92	41580	3 6 0		
3.6	398.71	5495	0.8	41580	4 0 0		
6.4	220.22	3051	1.45	41580	M 1 0 4 1 2 2 5 _ M _ - _ _ 2 . 2 K - -	224	90LA
5.9	242.24	3355	1.32	41580	2 5 0		
5.1	278.36	3854	1.14	41580	2 8 0		
4.5	315.65	4365	1.01	41580	3 0 0		
4.1	348.16	4817	0.92	41580	3 6 0		
3.6	398.71	5514	0.8	41580	4 0 0		
13	113.69	1588	4	66923	M 1 3 3 1 1 1 2 _ M _ - _ _ 2 . 2 A - -	263	100L
11	126.62	1768	3.59	66826	1 2 5		
10	139.07	1935	3.34	66726	1 4 0		
9.2	154.89	2155	3	66730	1 6 0		
8.2	173.37	2425	2.62	66636	1 8 0		
7.7	184.46	2584	2.46	66536	2 0 0		
6.7	212.09	2957	2.18	66442	2 2 5		
6.3	226.98	3126	2.03	64632	M 1 3 4 1 2 2 5 _ M _ - _ _ 2 . 2 A - -	305	100L
5.7	249.68	3438	1.85	64632	2 5 0		
5	286.9	3949	1.61	64632	2 8 0		
4.4	325.33	4472	1.42	64632	3 0 0		
4	358.84	4936	1.29	64632	3 6 0		
3.5	410.95	5649	1.12	64632	4 0 0		
3.1	463.22	6365	1	64632	4 5 0		
2.7	523.74	7191	0.88	64632	5 0 0		
6.3	226.98	3137	2.02	64632	M 1 3 4 1 2 2 5 _ M _ - _ _ 2 . 2 K - -	299	90LA
5.7	249.68	3450	1.84	64632	2 5 0		
4.9	286.9	3963	1.6	64632	2 8 0		
4.4	325.33	4488	1.41	64632	3 0 0		
4	358.84	4953	1.28	64632	3 6 0		
3.5	410.95	5669	1.12	64632	4 0 0		
3.1	463.22	6387	0.99	64632	4 5 0		
2.7	523.74	7216	0.88	64632	5 0 0		
6.8	208.15	2903	3.79	80900	M 1 4 3 1 2 0 0 _ M _ - _ _ 2 . 2 A - -	392	100L
6.7	211.96	2951	3.42	80900	2 2 5		
5.8	246.73	3402	3.11	80613	M 1 4 4 1 2 2 5 _ M _ - _ _ 2 . 2 A - -	421	100L
5.3	271.4	3741	2.83	80613	2 5 0		
4.6	311.86	4297	2.47	80613	2 8 0		
4	353.64	4865	2.18	80613	3 0 0		
3.7	390.06	5369	1.97	80613	3 6 0		
3.2	446.71	6145	1.72	80613	4 0 0		
2.9	492.49	6769	1.59	80613	4 5 0		
2.6	556.83	7647	1.41	80613	5 0 0		
2.2	645.58	8856	1.22	80613	6 5 0		
1.9	770.01	10548	1.02	80613	7 3 0		
1.8	801.52	10952	0.97	80613	8 6 0		
1.5	929.27	12686	0.84	80613	1 0 C		
5.8	246.73	3414	3.1	80613	M 1 4 4 1 2 2 5 _ M _ - _ _ 2 . 2 K - -	415	90LA
5.2	271.4	3754	2.82	80613	2 5 0		
4.6	311.86	4312	2.46	80613	2 8 0		
4	353.64	4882	2.17	80613	3 0 0		
3.6	390.06	5388	1.97	80613	3 6 0		
3.2	446.71	6166	1.72	80613	4 0 0		
2.9	492.49	6793	1.59	80613	4 5 0		
2.6	556.83	7674	1.4	80613	5 0 0		
2.2	645.58	8887	1.21	80613	6 5 0		
1.8	770.01	10585	1.02	80613	7 3 0		
1.8	801.52	10991	0.97	80613	8 6 0		
1.5	929.27	12731	0.84	80613	1 0 C		

NOTE

Other output speeds are available using 2 and 8 pole motors - Consult Textron Power Transmission

0205

2.2 kW

6 POLE

N2 R/MIN Output Speed	i Ratio	M2 Nm Output Torque	Fm Service Factor	N Overhung Load	Unit Designation Column Entry 1 Through 20 Spaces to be filled when entering order	Kg Weight of base mount unit	Motor Size
265	3.58	77	3.02	4780	M 0 4 2 2 3 . 6 _ M _ - _ _ 2 . 2 C - -	56	112M
188	5.04	108	2.51	5000	5 . 0		
168	5.65	121	2.35	5070	5 . 6		
150	6.34	136	2.15	5130	6 . 3		
118	8.05	172	1.79	5250	8 . 0		
104	9.13	196	1.62	5350	9 . 0		
87	10.89	233	1.43	5540	1 1 .		
76	12.54	268	1.21	5680	1 2 .		
65	14.58	313	1.08	5820	1 4 .		
58	16.31	349	0.97	5920	1 6 .		
55	17.39	373	0.9	5970	1 8 .		
265	3.58	77	3.8	7200	M 0 5 2 2 3 . 6 _ M _ - _ _ 2 . 2 C - -	56	112M
188	5.04	108	3.53	4820	5 . 0		
168	5.65	121	3.39	4890	5 . 6		
150	6.34	136	3.03	4950	6 . 3		
118	8.05	173	2.6	5060	8 . 0		
104	9.13	196	2.29	5150	9 . 0		
87	10.89	234	1.92	5340	1 1 .		
76	12.54	269	1.58	5480	1 2 .		
65	14.58	313	1.43	5610	1 4 .		
58	16.31	349	1.29	5700	1 6 .		
55	17.39	373	1.21	5750	1 8 .		
46	20.61	442	1.02	5060	2 0 .		
43	22	471	0.95	4450	2 2 .		
757	1.26	27	3.39	3270	M 0 6 1 2 1 . 2 _ M _ - _ _ 2 . 2 C - -	47	112M
674	1.41	30	3.03	3270	1 . 4		
531	1.79	39	2.69	3270	1 . 8		
468	2.03	44	2.42	3270	2 . 0		
393	2.42	52	2.08	3260	2 . 5		
341	2.79	60	1.58	3260	2 . 8		
293	3.24	70	1.54	3250	3 . 2		
262	3.62	79	1.45	3240	3 . 6		
246	3.86	84	1.4	3240	4 . 0		
207	4.58	100	1.18	3230	4 . 5		
194	4.89	106	1.11	3190	5 . 0		
157	6.07	131	0.9	2820	6 . 0		
152	6.24	134	3.53	7200	M 0 6 2 2 5 . 6 _ M _ - _ _ 2 . 2 C - -	61	112M
136	6.99	150	3.39	7200	6 . 3		
121	7.85	168	3.03	7200	8 . 0		
95	9.97	214	2.77	7200	9 . 0		
84	11.3	243	2.5	7200	1 1 .		
70	13.48	290	2.15	7200	1 2 .		
61	15.52	333	1.58	7200	1 4 .		
53	18.05	388	1.54	7200	1 6 .		
47	20.2	433	1.44	7200	1 8 .		
44	21.53	462	1.35	7200	2 0 .		
37	25.51	547	1.14	7200	2 2 .		
35	27.24	584	1.07	7200	2 8 .		
28	33.8	724	0.86	7200	3 2 .		
461	2.06	44	3.89	5680	M 0 7 1 2 2 . 0 _ M _ - _ _ 2 . 2 C - -	55	112M
380	2.5	54	3.39	5760	2 . 5		
345	2.75	60	3.21	5790	2 . 8		
301	3.16	68	3.03	5844	3 . 2		
265	3.58	78	2.8	6037	3 . 6		
240	3.95	86	2.54	5875	4 . 0		
210	4.53	98	2.22	5890	4 . 5		
186	5.12	111	1.97	5832	5 . 0		
160	5.93	129	1.7	5966	6 . 0		
134	7.08	153	1.43	5835	7 . 1		
123	7.75	168	1.3	6102	8 . 0		
84	11.35	243	3.18	8620	M 0 7 2 2 1 1 . _ M _ - _ _ 2 . 2 C - -	69	112M
76	12.48	267	2.96	8440	1 2 .		
66	14.34	307	2.63	8126	1 4 .		
58	16.26	348	2.35	7790	1 6 .		
53	17.94	384	2.15	7470	1 8 .		
46	20.54	439	1.9	6963	2 0 .		
41	23.23	496	1.7	6666	2 2 .		
35	26.93	575	1.49	6666	2 8 .		
30	32.12	685	1.26	5217	3 2 .		
27	35.17	749	1.16	5217	3 6 .		
23	42.21	897	0.97	3265	4 5 .		
263	3.62	78	3.98	7740	M 0 8 1 2 3 . 6 _ M _ - _ _ 2 . 2 C - -	69	112M
240	3.96	86	3.48	7740	4 . 0		
212	4.48	97	3.3	7832	4 . 5		
188	5.05	110	3.08	7904	5 . 0		
155	6.12	133	2.76	8102	6 . 0		
133	7.14	155	2.45	8120	7 . 1		
121	7.85	170	2.28	8125	8 . 0		

NOTE

Other output speeds are available using 2 and 8 pole motors - Consult Textron Power Transmission

0205

2.2 kW

6 POLE

N2 R/MIN Output Speed	i Ratio	M2 Nm Output Torque	Fm Service Factor	N Overhung Load	Unit Designation Column Entry 1 Through 20 Spaces to be filled when entering order	Kg Weight of base mount unit	Motor Size
52	18.26	390	3.48	20000	M 0 8 2 2 1 8 . _ M _ - _ _ 2 . 2 C - -	101	112M
46	20.66	442	3.3	20000	2 0 .		
41	23.32	500	3.08	20000	2 2 .		
34	28.27	604	2.73	20000	2 8 .		
29	32.97	704	2.34	17987	3 2 .		
26	36.21	773	2.13	17718	3 6 .		
21	44.38	947	1.74	16267	4 5 .		
20	48.46	1033	1.6	15492	5 0 .		
17	55.8	1184	1.31	14699	5 6 .		
16	60.33	1273	1.3	14606	M 0 8 3 2 5 6 . _ M _ - _ _ 2 . 2 C - -	102	112M
14	66.02	1394	1.18	12236	6 3 .		
13	74.69	1581	1.04	11076	7 1 .		
11	84.31	1780	0.93	9804	8 0 .		
24	40.25	862	2.87	29500	M 0 9 2 1 4 0 . _ M _ - _ _ 2 . 2 C - -	142	112M
21	44.44	951	2.6	29500	4 5 .		
19	49.07	1049	2.65	29400	5 0 .		
17	55.18	1174	1.66	29390	5 6 .		
16	61.13	1304	1.89	29250	6 3 .		
14	68.74	1464	1.66	28975	7 1 .		
16	59.85	1270	2.08	29200	M 0 9 3 1 5 6 . _ M _ - _ _ 2 . 2 C - -	151	112M
14	66.49	1410	1.87	29100	6 3 .		
13	74.26	1577	1.81	29100	7 1 .		
12	82.51	1751	1.63	29000	8 0 .		
10	93.92	1989	1.33	28800	9 0 .		
9.2	103.68	2198	1.2	28700	1 0 0		
8.2	116.55	2474	1.16	28600	1 1 2		
7.4	128.66	2728	1.05	28500	1 2 5		
6.5	145.2	3067	0.81	28300	1 4 0		
18	51.49	1097	3.53	49500	M 1 0 2 1 5 6 . _ M _ - _ _ 2 . 2 C - -	188	112M
16	57.75	1229	3.38	49400	6 3 .		
15	62.05	1317	3.16	49200	7 1 .		
16	60.23	1275	2.96	49200	M 1 0 3 1 5 6 . _ M _ - _ _ 2 . 2 C - -	205	112M
14	66.93	1418	2.66	49000	6 3 .		
13	71.17	1506	2.93	48900	7 1 .		
12	79.08	1673	2.64	48600	8 0 .		
10	95.44	2019	1.87	47635	9 0 .		
8.6	109.97	2328	1.62	46378	1 0 0		
8.4	112.77	2385	1.85	46425	1 1 2		
7.3	129.94	2746	1.61	46625	1 2 5		
7	135.88	2870	1.45	46450	1 4 0		
6.1	156.57	3299	1.26	46044	1 6 0		
4.3	220.22	4569	0.97	41580	M 1 0 4 1 2 2 5 _ M _ - _ _ 2 . 2 C - -	237	112M
3.9	242.24	5024	0.88	41580	2 5 0		
8.4	113.69	2384	2.66	66600	M 1 3 3 1 1 1 2 _ M _ - _ _ 2 . 2 C - -	270	112M
7.5	126.62	2653	2.39	66531	1 2 5		
6.8	139.07	2907	2.22	66420	1 4 0		
6.1	154.89	3234	2	66373	1 6 0		
5.5	173.37	3638	1.75	66232	1 8 0		
5.2	184.46	3878	1.64	66115	2 0 0		
4.5	212.09	4446	1.45	65962	2 2 5		
4.2	226.98	4696	1.35	64632	M 1 3 4 1 2 2 5 _ M _ - _ _ 2 . 2 C - -	312	112M
3.8	249.68	5164	1.23	64632	2 5 0		
3.3	286.9	5930	1.07	64632	2 8 0		
2.9	325.33	6714	0.95	64632	3 0 0		
2.6	358.84	7410	0.86	64632	3 6 0		
6.7	142.66	2977	3.39	80900	M 1 4 3 1 1 4 0 _ M _ - _ _ 2 . 2 C - -	399	112M
6.1	154.57	3230	3.13	80900	1 6 0		
5.1	185.56	3894	2.82	80900	1 8 0		
4.6	208.15	4359	2.52	80900	2 0 0		
4.5	211.96	4428	2.28	80865	2 2 5		
3.9	246.73	5107	2.07	80613	M 1 4 4 1 2 2 5 _ M _ - _ _ 2 . 2 C - -	428	112M
3.5	271.4	5616	1.89	80613	2 5 0		
3	311.86	6449	1.64	80613	2 8 0		
2.7	353.64	7301	1.45	80613	3 0 0		
2.4	390.06	8057	1.32	80613	3 6 0		
2.1	446.71	9219	1.15	80613	4 0 0		
1.9	492.49	10157	1.06	80613	4 5 0		
1.7	556.83	11473	0.94	80613	5 0 0		
1.5	645.58	13285	0.81	80613	6 5 0		

NOTE

Other output speeds are available using 2 and 8 pole motors - Consult Textron Power Transmission

3.0 kW

4 POLE

N2 R/MIN Output Speed	i Ratio	M2 Nm Output Torque	Fm Service Factor	N Overhung Load	Unit Designation Column Entry 1 Through 20 Spaces to be filled when entering order	Kg Weight of base mount unit	Motor Size
398	3.58	69	2.91	4476	M 0 4 2 2 3 . 6 _ M _ - _ _ 3 . 0 A - -	49	100L
283	5.04	98	2.41	4648	5 . 0		
252	5.65	110	2.26	4720	5 . 6		
225	6.34	123	2.12	4791	6 . 3		
177	8.05	157	1.84	4911	8 . 0		
156	9.13	177	1.68	4968	9 . 0		
131	10.89	212	1.46	5026	1 1 .		
114	12.54	244	1.16	5202	1 2 .		
98	14.58	284	1.04	5343	1 4 .		
87	16.31	317	0.96	5110	1 6 .		
82	17.39	339	0.92	5140	1 8 .		
283	5.04	98	3.87	4395	M 0 5 2 2 5 . 0 _ M _ - _ _ 3 . 0 A - -	49	100L
252	5.65	110	3.73	4450	5 . 6		
225	6.34	123	3.34	4504	6 . 3		
177	8.05	157	2.86	4733	8 . 0		
156	9.13	178	2.52	4790	9 . 0		
131	10.89	212	2.11	4850	1 1 .		
114	12.54	244	1.74	4855	1 2 .		
98	14.58	284	1.58	4762	1 4 .		
87	16.31	317	1.42	5204	1 6 .		
82	17.39	339	1.33	5254	1 8 .		
69	20.61	401	1.12	5221	2 0 .		
65	22	429	1.05	4500	2 2 .		
52	27.3	532	0.85	3280	2 8 .		
1135	1.26	24	3.73	2880	M 0 6 1 2 1 . 2 _ M _ - _ _ 3 . 0 A - -	40	100L
1011	1.41	27	3.34	2960	1 . 4		
796	1.79	35	2.96	3186	1 . 8		
702	2.03	40	2.67	3213	2 . 0		
589	2.42	47	2.29	3208	2 . 5		
512	2.79	55	1.74	3145	2 . 8		
440	3.24	64	1.69	3067	3 . 2		
393	3.62	72	1.59	3260	3 . 6		
369	3.86	76	1.54	3221	4 . 0		
311	4.58	90	1.3	3152	4 . 5		
291	4.89	96	1.22	3010	5 . 0		
235	6.07	120	0.98	2690	6 . 0		
228	6.24	122	3.87	7200	M 0 6 2 2 5 . 6 _ M _ - _ _ 3 . 0 A - -	54	100L
204	6.99	136	3.73	7200	6 . 3		
182	7.85	153	3.34	7200	8 . 0		
143	9.97	194	3.05	7200	9 . 0		
126	11.3	221	2.73	7200	1 1 .		
106	13.48	263	2.33	7200	1 2 .		
92	15.52	303	1.74	7200	1 4 .		
79	18.05	352	1.69	7200	1 6 .		
71	20.2	394	1.59	7200	1 8 .		
66	21.53	419	1.49	7200	2 0 .		
56	25.51	497	1.26	7200	2 2 .		
52	27.24	530	1.18	7200	2 8 .		
42	33.8	658	0.95	7200	3 2 .		
36	39.86	773	0.81	7200	3 6 .		
570	2.5	49	3.73	5498	M 0 7 1 2 2 . 5 _ M _ - _ _ 3 . 0 A - -	48	100L
518	2.75	54	3.54	5546	2 . 8		
451	3.16	62	3.34	5573	3 . 2		
398	3.58	70	3.09	5723	3 . 6		
361	3.95	78	2.79	5569	4 . 0		
315	4.53	89	2.44	5621	4 . 5		
278	5.12	101	2.16	5614	5 . 0		
240	5.93	117	1.87	5667	6 . 0		
201	7.08	139	1.57	5706	7 . 1		
184	7.75	152	1.43	5700	8 . 0		
126	11.35	221	3.23	7698	M 0 7 2 2 1 1 . _ M _ - _ _ 3 . 0 A - -	62	100L
114	12.48	243	3.03	7607	1 2 .		
99	14.34	279	2.71	7670	1 4 .		
88	16.26	316	2.48	7956	1 6 .		
79	17.94	349	2.27	8480	1 8 .		
69	20.54	399	2.01	8190	2 0 .		
61	23.23	451	1.8	7040	2 2 .		
53	26.93	523	1.58	6400	2 8 .		
44	32.12	623	1.35	6898	3 2 .		
41	35.17	682	1.24	6012	3 6 .		
34	42.21	815	1.06	5750	4 5 .		
360	3.96	78	3.8	7189	M 0 8 1 2 4 . 0 _ M _ - _ _ 3 . 0 A - -	62	100L
318	4.48	88	3.51	7286	4 . 5		
282	5.05	100	3.17	7394	5 . 0		
233	6.12	121	2.68	7521	6 . 0		
200	7.14	141	2.35	7618	7 . 1		
182	7.85	155	2.18	7686	8 . 0		

NOTE

Other output speeds are available using 2 and 8 pole motors - Consult Textron Power Transmission

3.0 kW

4 POLE

N2 R/MIN	i	M2 Nm	Fm	N	Unit Designation	Kg	
Output Speed	Ratio	Output Torque	Service Factor	Overhung Load	Column Entry 1 Through 20 Spaces to be filled when entering order	Weight of base mount unit	Motor Size
78	18.26	354	3.83	18200	M 0 8 2 2 1 8 . _ M _ - _ _ 3 . 0 A - -	94	100L
69	20.66	401	3.64	18800	2 0 .		
61	23.32	456	3.37	19500	2 2 .		
50	28.27	548	2.9	20000	2 8 .		
43	32.97	640	2.55	18667	3 2 .		
39	36.21	702	2.35	18492	3 6 .		
32	44.38	860	1.92	17475	4 5 .		
29	48.46	939	1.76	17036	5 0 .		
26	55.8	1078	1.43	18755	5 6 .		
24	60.33	1154	1.39	18100	M 0 8 3 2 5 6 . _ M _ - _ _ 3 . 0 A - -	95	100L
22	66.02	1268	1.3	16724	6 3 .		
19	74.69	1430	1.15	14693	7 1 .		
17	84.31	1614	1.02	16100	8 0 .		
14	102.2	1959	0.84	11200	1 0 0		
40	35.67	693	3.37	29600	M 0 9 2 1 3 6 . _ M _ - _ _ 3 . 0 A - -	135	100L
35	40.25	783	3.15	29600	4 0 .		
32	44.44	865	2.85	29492	4 5 .		
29	49.07	953	2.54	29478	5 0 .		
26	55.18	1068	1.88	29407	5 6 .		
23	61.13	1187	2.08	29370	6 3 .		
21	68.74	1332	1.85	29234	7 1 .		
24	59.85	1155	2.24	29335	M 0 9 3 1 5 6 . _ M _ - _ _ 3 . 0 A - -	144	100L
21	66.49	1281	2.06	29235	6 3 .		
19	74.26	1431	2	29194	7 1 .		
17	82.51	1590	1.8	29120	8 0 .		
15	93.92	1806	1.46	28944	9 0 .		
14	103.68	1994	1.32	28813	1 0 0		
12	116.55	2244	1.27	28779	1 1 2		
11	128.66	2480	1.15	28648	1 2 5		
10	145.2	2782	0.89	28400	1 4 0		
8.9	160.29	3065	0.81	28300	1 6 0		
28	51.49	1001	3.87	46600	M 1 0 2 1 5 6 . _ M _ - _ _ 3 . 0 A - -	181	100L
25	57.75	1113	3.73	48400	6 3 .		
23	62.05	1198	3.47	49452	7 1 .		
24	60.23	1157	3.26	29500	M 1 0 3 1 5 6 . _ M _ - _ _ 3 . 0 A - -	193	100L
21	66.93	1285	2.93	29500	6 3 .		
20	71.17	1366	3.23	29500	7 1 .		
18	79.08	1517	2.91	48921	8 0 .		
15	95.44	1835	2.05	48286	9 0 .		
13	109.97	2111	1.79	47825	1 0 0		
13	112.77	2164	2.04	47825	1 1 2		
11	129.94	2492	1.77	47287	1 2 5		
10	135.88	2596	1.6	47214	1 4 0		
9.1	156.57	2995	1.39	46586	1 6 0		
6.5	220.22	4145	1.06	41580	M 1 0 4 1 2 2 5 _ M _ - _ _ 3 . 0 A - -	230	100L
5.9	242.24	4559	0.97	41580	2 5 0		
5.1	278.36	5237	0.84	41580	2 8 0		
16	90.75	1736	3.57	66900	M 1 3 3 1 9 0 . _ M _ - _ _ 3 . 0 A - -	263	100L
14	101.07	1933	3.21	66700	1 0 0		
13	113.69	2165	2.93	66738	1 1 2		
11	126.62	2410	2.63	66611	1 2 5		
10	139.07	2639	2.45	66511	1 4 0		
9.2	154.89	2938	2.2	66484	1 6 0		
8.2	173.37	3307	1.92	66345	1 8 0		
7.7	184.46	3524	1.8	66245	2 0 0		
6.7	212.09	4032	1.6	66103	2 2 5		
6.3	226.98	4263	1.49	64632	M 1 3 4 1 2 2 5 _ M _ - _ _ 3 . 0 A - -	305	100L
5.7	249.68	4689	1.35	64632	2 5 0		
5	286.9	5386	1.18	64632	2 8 0		
4.4	325.33	6098	1.04	64632	3 0 0		
4	358.84	6731	0.94	64632	3 6 0		
3.5	410.95	7704	0.82	64632	4 0 0		
10	142.66	2704	3.73	80900	M 1 4 3 1 1 4 0 _ M _ - _ _ 3 . 0 A - -	392	100L
9.2	154.57	2936	3.44	80900	1 6 0		
7.7	185.56	3538	3.11	80900	1 8 0		
6.8	208.15	3959	2.78	80900	2 0 0		
6.7	211.96	4025	2.51	80900	2 2 5		
5.8	246.73	4639	2.28	80613	M 1 4 4 1 2 2 5 _ M _ - _ _ 3 . 0 A - -	421	100L
5.3	271.4	5102	2.08	80613	2 5 0		
4.6	311.86	5859	1.81	80613	2 8 0		
4	353.64	6634	1.6	80613	3 0 0		
3.7	390.06	7322	1.45	80613	3 6 0		
3.2	446.71	8379	1.26	80613	4 0 0		
2.9	492.49	9231	1.17	80613	4 5 0		
2.6	556.83	10428	1.03	80613	5 0 0		
2.2	645.58	12077	0.89	80613	6 5 0		

NOTE

Other output speeds are available using 2 and 8 pole motors - Consult Textron Power Transmission

3.0 kW

6 POLE

N2 R/MIN Output Speed	i Ratio	M2 Nm Output Torque	Fm Service Factor	N Overhung Load	Unit Designation Column Entry 1 Through 20 Spaces to be filled when entering order	Kg Weight of base mount unit	Motor Size
757	1.26	37	2.87	5070	M 0 7 1 2 1 . 2 _ M _ - _ _ 3 . 0 C - -	74	132SA
689	1.39	41	2.87	5200	1 . 4		
527	1.81	53	2.87	5430	1 . 8		
464	2.06	61	2.87	5464	2 . 0		
382	2.5	74	2.5	5512	2 . 5		
347	2.75	81	2.37	5523	2 . 8		
302	3.16	93	2.23	5518	3 . 2		
267	3.58	106	2.07	5737	3 . 6		
242	3.95	116	1.87	5427	4 . 0		
211	4.53	133	1.63	5366	4 . 5		
187	5.12	151	1.45	5194	5 . 0		
161	5.93	175	1.25	5363	6 . 0		
135	7.08	208	1.05	5082	7 . 1		
123	7.75	228	0.96	5430	8 . 0		
260	3.68	107	2.87	8020	M 0 7 2 2 3 . 6 _ M _ - _ _ 3 . 0 C - -	88	132SA
187	5.09	148	2.87	8470	5 . 0		
167	5.72	166	2.87	8620	5 . 6		
152	6.29	183	2.87	8750	6 . 3		
116	8.22	239	2.87	9090	8 . 0		
102	9.34	271	2.73	9240	9 . 0		
84	11.35	330	2.34	7950	1 1 .		
77	12.48	363	2.18	7683	1 2 .		
67	14.34	417	1.94	7218	1 4 .		
59	16.26	472	1.73	6718	1 6 .		
53	17.94	522	1.58	6243	1 8 .		
46	20.54	596	1.4	5491	2 0 .		
41	23.23	673	1.26	5050	2 2 .		
35	26.93	781	1.1	5050	2 8 .		
30	32.12	930	0.93	2898	3 2 .		
27	35.17	1017	0.85	2898	3 6 .		
341	2.8	83	3.78	7210	M 0 8 1 2 2 . 8 _ M _ - _ _ 3 . 0 C - -	89	132SA
293	3.26	96	3.42	7252	3 . 2		
264	3.62	106	2.93	7475	3 . 6		
241	3.96	117	2.57	7334	4 . 0		
213	4.48	132	2.43	7492	4 . 5		
189	5.05	149	2.27	7497	5 . 0		
156	6.12	181	2.03	7689	6 . 0		
134	7.14	210	1.81	7589	7 . 1		
122	7.85	231	1.68	7532	8 . 0		
63	15.04	436	3.55	19300	M 0 8 2 2 1 4 . _ M _ - _ _ 3 . 0 C - -	121	132SA
57	16.69	483	2.93	19900	1 6 .		
52	18.26	529	2.57	18460	1 8 .		
46	20.66	599	2.43	18233	2 0 .		
41	23.32	678	2.27	18181	2 2 .		
34	28.27	819	2.01	18181	2 8 .		
29	32.97	955	1.73	15687	3 2 .		
26	36.21	1049	1.57	15111	3 6 .		
22	44.38	1285	1.28	13552	4 5 .		
20	48.46	1401	1.18	12214	5 0 .		
17	55.8	1606	0.96	11775	5 6 .		
16	60.33	1727	0.96	10683	M 0 8 3 2 5 6 . _ M _ - _ _ 3 . 0 C - -	126	132SA
14	66.02	1891	0.87	7953	6 3 .		
37	26.04	758	3.48	29500	M 0 9 2 1 2 5 . _ M _ - _ _ 3 . 0 C - -	162	132SA
33	28.74	837	3.15	29500	2 8 .		
30	32.31	940	2.83	29500	3 2 .		
27	35.67	1038	2.59	29400	3 6 .		
24	40.25	1169	2.11	28790	4 0 .		
21	44.44	1290	1.91	29303	4 5 .		
19	49.07	1423	1.95	29067	5 0 .		
17	55.18	1593	1.22	29150	5 6 .		
16	61.13	1769	1.4	28995	6 3 .		
14	68.74	1985	1.22	28520	7 1 .		
22	42.7	1242	3.35	49400	M 1 0 2 1 4 5 . _ M _ - _ _ 3 . 0 C - -	208	132SA
20	47.93	1386	3.04	49100	5 0 .		
19	51.49	1488	2.6	48845	5 6 .		
17	57.75	1668	2.49	48681	6 3 .		
15	62.05	1787	2.33	48436	7 1 .		
15	64.17	1851	3.35	66800	M 1 3 3 1 6 3 . _ M _ - _ _ 3 . 0 C - -	290	132SA
13	71.32	2039	3.11	66700	7 1 .		
12	80.39	2298	2.76	66600	8 0 .		
11	90.75	2593	2.39	66600	9 0 .		
9.4	101.07	2885	2.15	66500	1 0 0		
8.4	113.69	3234	1.96	66328	1 1 2		
7.5	126.62	3599	1.76	66225	1 2 5		
6.9	139.07	3943	1.64	66100	1 4 0		
6.2	154.89	4387	1.47	66000	1 6 0		
5.5	173.37	4935	1.29	65812	1 8 0		
5.2	184.46	5260	1.21	65675	2 0 0		
4.5	212.09	6031	1.07	65462	2 2 5		
7.6	124.89	3551	3.1	80900	M 1 4 3 1 1 1 2 _ M _ - _ _ 3 . 0 C - -	419	132SA
7.1	135.31	3852	2.86	80900	1 2 5		
6.7	142.66	4039	2.5	80900	1 4 0		
6.2	154.57	4382	2.3	80900	1 6 0		
5.1	185.56	5282	2.08	80900	1 8 0		
4.6	208.15	5913	1.86	80854	2 0 0		
4.5	211.96	6007	1.68	80825	2 2 5		

NOTE

Other output speeds are available using 2 and 8 pole motors - Consult Textron Power Transmission

4.0 kW

4 POLE

N2 R/MIN	i	M2 Nm	Fm	N	Unit Designation	Kg	
Output Speed	Ratio	Output Torque	Service Factor	Overhung Load	Column Entry 1 Through 20 Spaces to be filled when entering order	Weight of base mount unit	Motor Size
400	3.58	92	2.19	4413	M 0 4 2 2 3 . 6 _ M _ - _ _ 4 . 0 A - -	56	112M
285	5.04	129	1.82	4561	5 . 0		
254	5.65	145	1.71	4620	5 . 6		
226	6.34	163	1.6	4678	6 . 3		
178	8.05	208	1.39	4770	8 . 0		
157	9.13	235	1.27	4809	9 . 0		
132	10.89	281	1.1	4835	1 1 .		
114	12.54	323	0.88	4930	1 2 .		
400	3.58	92	3.17	4160	M 0 5 2 2 3 . 6 _ M _ - _ _ 4 . 0 A - -	56	112M
285	5.04	130	2.92	4345	5 . 0		
254	5.65	146	2.82	4394	5 . 6		
226	6.34	163	2.52	4438	6 . 3		
178	8.05	208	2.16	4596	8 . 0		
157	9.13	236	1.9	4634	9 . 0		
132	10.89	281	1.6	4666	1 1 .		
114	12.54	324	1.31	4653	1 2 .		
98	14.58	377	1.19	4445	1 4 .		
88	16.31	421	1.07	4920	1 6 .		
83	17.39	449	1	4950	1 8 .		
70	20.61	531	0.85	4790	2 0 .		
1143	1.26	33	2.82	2828	M 0 6 1 2 1 . 2 _ M _ - _ _ 4 . 0 A - -	47	112M
1018	1.41	37	2.52	2904	1 . 4		
802	1.79	46	2.23	3095	1 . 8		
707	2.03	53	2.01	3131	2 . 0		
593	2.42	63	1.73	3121	2 . 5		
515	2.79	73	1.31	3055	2 . 8		
443	3.24	85	1.28	2932	3 . 2		
396	3.62	95	1.2	3250	3 . 6		
371	3.86	101	1.16	3190	4 . 0		
313	4.58	120	0.98	3090	4 . 5		
323	4.44	114	3.17	7200	M 0 6 2 2 5 . 0 _ M _ - _ _ 4 . 0 A - -	61	112M
230	6.24	162	2.92	7200	5 . 6		
205	6.99	180	2.82	7200	6 . 3		
183	7.85	202	2.52	7200	8 . 0		
144	9.97	258	2.3	7200	9 . 0		
127	11.3	292	2.06	7200	1 1 .		
106	13.48	348	1.76	7200	1 2 .		
92	15.52	401	1.31	7200	1 4 .		
79	18.05	466	1.28	7200	1 6 .		
71	20.2	521	1.2	7200	1 8 .		
67	21.53	556	1.13	7200	2 0 .		
56	25.51	658	0.95	7200	2 2 .		
53	27.24	702	0.89	7200	2 8 .		
1138	1.26	33	3.24	4480	M 0 7 1 2 1 . 2 _ M _ - _ _ 4 . 0 A - -	55	112M
1035	1.39	36	3.24	4600	1 . 4		
792	1.81	47	3.24	4935	1 . 8		
697	2.06	53	3.24	5092	2 . 0		
574	2.5	65	2.82	5320	2 . 5		
522	2.75	72	2.67	5379	2 . 8		
454	3.16	82	2.52	5377	3 . 2		
400	3.58	93	2.33	5564	3 . 6		
363	3.95	103	2.11	5261	4 . 0		
317	4.53	118	1.85	5282	4 . 5		
280	5.12	134	1.63	5216	5 . 0		
242	5.93	155	1.41	5230	6 . 0		
203	7.08	185	1.18	5200	7 . 1		
390	3.68	94	3.24	7490	M 0 7 2 2 3 . 6 _ M _ - _ _ 4 . 0 A - -	69	112M
282	5.09	131	3.24	7780	5 . 0		
251	5.72	147	3.24	7930	5 . 6		
228	6.29	161	3.24	8050	6 . 3		
175	8.22	213	2.97	8370	8 . 0		
154	9.34	241	2.75	8510	9 . 0		
126	11.35	293	2.44	7128	1 1 .		
115	12.48	321	2.29	6943	1 2 .		
100	14.34	370	2.04	6844	1 4 .		
88	16.26	419	1.88	7110	1 6 .		
80	17.94	463	1.71	7804	1 8 .		
70	20.54	529	1.52	7385	2 0 .		
62	23.23	597	1.36	5724	2 2 .		
53	26.93	693	1.19	4800	2 8 .		
45	32.12	826	1.02	5520	3 2 .		
41	35.17	903	0.94	4240	3 6 .		
513	2.8	73	3.71	6860	M 0 8 1 2 2 . 8 _ M _ - _ _ 4 . 0 A - -	69	112M
440	3.26	85	3.36	6933	3 . 2		
397	3.62	94	3.14	7075	3 . 6		
363	3.96	104	2.87	6917	4 . 0		
321	4.48	117	2.65	7038	4 . 5		
284	5.05	132	2.39	7115	5 . 0		
234	6.12	160	2.02	7182	6 . 0		
201	7.14	187	1.77	7230	7 . 1		
183	7.85	205	1.65	7268	8 . 0		

NOTE

Other output speeds are available using 2 and 8 pole motors - Consult Textron Power Transmission

0205

4.0 kW

4 POLE

N2 R/MIN	i	M2 Nm	Fm	N	Unit Designation	Kg	
Output Speed	Ratio	Output Torque	Service Factor	Overhung Load	Column Entry 1 Through 20 Spaces to be filled when entering order	Weight of base mount unit	Motor Size
86	16.69	428	3.32	17400	M 0 8 2 2 1 6 . _ M _ - _ _ 4 . 0 A - -	101	112M
79	18.26	469	2.89	16986	1 8 .		
69	20.66	531	2.75	17340	2 0 .		
62	23.32	604	2.55	17752	2 2 .		
51	28.27	726	2.19	17785	2 8 .		
44	32.97	847	1.92	16763	3 2 .		
40	36.21	930	1.77	16338	3 6 .		
32	44.38	1139	1.45	15792	4 5 .		
30	48.46	1244	1.33	15060	5 0 .		
26	55.8	1427	1.08	18100	5 6 .		
24	60.33	1528	1.05	17100	M 0 8 3 2 5 6 . _ M _ - _ _ 4 . 0 A - -	102	112M
22	66.02	1679	0.98	15000	6 3 .		
19	74.69	1894	0.87	11900	7 1 .		
55	26.04	671	3.93	27400	M 0 9 2 1 2 5 . _ M _ - _ _ 4 . 0 A - -	142	112M
50	28.74	740	3.56	28200	2 8 .		
44	32.31	837	2.77	29300	3 2 .		
40	35.67	918	2.55	28783	3 6 .		
36	40.25	1037	2.38	29111	4 0 .		
32	44.44	1146	2.15	29338	4 5 .		
29	49.07	1262	1.92	29305	5 0 .		
26	55.18	1415	1.42	29212	5 6 .		
23	61.13	1572	1.57	29151	6 3 .		
21	68.74	1763	1.4	28990	7 1 .		
24	59.85	1530	1.69	29100	M 0 9 3 1 5 6 . _ M _ - _ _ 4 . 0 A - -	151	112M
22	66.49	1696	1.56	29000	6 3 .		
19	74.26	1895	1.51	28900	7 1 .		
17	82.51	2105	1.36	28800	8 0 .		
15	93.92	2392	1.1	28600	9 0 .		
14	103.68	2641	1	28400	1 0 0		
12	116.55	2971	0.96	28400	1 1 2		
11	128.66	3283	0.87	28200	1 2 5		
34	42.7	1098	3.79	43600	M 1 0 2 1 4 5 . _ M _ - _ _ 4 . 0 A - -	188	112M
30	47.93	1227	3.41	45100	5 0 .		
28	51.49	1325	2.92	46066	5 6 .		
25	57.75	1474	2.82	47800	6 3 .		
23	62.05	1586	2.62	48813	7 1 .		
24	60.23	1532	2.46	29411	M 1 0 3 1 5 6 . _ M _ - _ _ 4 . 0 A - -	205	112M
21	66.93	1702	2.21	29411	6 3 .		
20	71.17	1809	2.44	29411	7 1 .		
18	79.08	2009	2.19	48094	8 0 .		
15	95.44	2430	1.55	47267	9 0 .		
13	109.97	2795	1.35	46641	1 0 0		
13	112.77	2865	1.54	46641	1 1 2		
11	129.94	3300	1.34	45946	1 2 5		
11	135.88	3438	1.21	45824	1 4 0		
9.2	156.57	3965	1.05	45000	1 6 0		
6.5	220.22	5489	0.8	41580	M 1 0 4 1 2 2 5 _ M _ - _ _ 4 . 0 A - -	237	112M
22	64.17	1637	3.79	66900	M 1 3 3 1 6 3 . _ M _ - _ _ 4 . 0 A - -	270	112M
20	71.32	1807	3.51	66800	7 1 .		
18	80.39	2036	3.12	66841	8 0 .		
16	90.75	2299	2.7	66800	9 0 .		
14	101.07	2559	2.42	66611	1 0 0		
13	113.69	2867	2.21	66507	1 1 2		
11	126.62	3192	1.99	66342	1 2 5		
10	139.07	3495	1.85	66242	1 4 0		
9.3	154.89	3891	1.66	66176	1 6 0		
8.3	173.37	4379	1.45	65981	1 8 0		
7.8	184.46	4666	1.36	65881	2 0 0		
6.8	212.09	5339	1.21	65678	2 2 5		
6.3	226.98	5645	1.12	64632	M 1 3 4 1 2 2 5 _ M _ - _ _ 4 . 0 A - -	312	112M
5.7	249.68	6208	1.02	64632	2 5 0		
5	286.9	7131	0.89	64632	2 8 0		
11	124.89	3153	3.49	80900	M 1 4 3 1 1 1 2 _ M _ - _ _ 4 . 0 A - -	399	112M
11	135.31	3419	3.22	80900	1 2 5		
10	142.66	3580	2.82	80900	1 4 0		
9.3	154.57	3887	2.6	80900	1 6 0		
7.7	185.56	4684	2.35	80900	1 8 0		
6.9	208.15	5242	2.1	80900	2 0 0		
6.8	211.96	5329	1.9	80900	2 2 5		
5.8	246.73	6143	1.72	80613	M 1 4 4 1 2 2 5 _ M _ - _ _ 4 . 0 A - -	428	112M
5.3	271.4	6755	1.57	80613	2 5 0		
4.6	311.86	7758	1.37	80613	2 8 0		
4.1	353.64	8784	1.21	80613	3 0 0		
3.7	390.06	9694	1.09	80613	3 6 0		
3.2	446.71	11095	0.95	80613	4 0 0		
2.9	492.49	12222	0.88	80613	4 5 0		

NOTE

Other output speeds are available using 2 and 8 pole motors - Consult Textron Power Transmission

0205

4.0 kW

6 POLE

N2 R/MIN	i	M2 Nm	Fm	N	Unit Designation	Kg	
Output Speed	Ratio	Output Torque	Service Factor	Overhung Load	Column Entry 1 Through 20 Spaces to be filled when entering order	Weight of base mount unit	Motor Size
761	1.26	49	2.16	4882	M 0 7 1 2 1 . 2 _ M _ - _ _ 4 . 0 C - -	78	132M
692	1.39	54	2.16	5004	1 . 4		
530	1.81	71	2.16	5186	1 . 8		
466	2.06	80	2.16	5194	2 . 0		
384	2.5	98	1.88	5203	2 . 5		
349	2.75	108	1.78	5190	2 . 8		
304	3.16	124	1.68	5111	3 . 2		
268	3.58	140	1.56	5362	3 . 6		
243	3.95	155	1.41	4868	4 . 0		
212	4.53	177	1.23	4711	4 . 5		
188	5.12	200	1.09	4396	5 . 0		
162	5.93	232	0.94	4610	6 . 0		
261	3.68	141	2.16	7888	M 0 7 2 2 3 . 6 _ M _ - _ _ 4 . 0 C - -	92	132M
188	5.09	196	2.16	8290	5 . 0		
168	5.72	221	2.16	8420	5 . 6		
153	6.29	243	2.16	8522	6 . 3		
117	8.22	317	2.16	8334	8 . 0		
103	9.34	360	2.06	8232	9 . 0		
85	11.35	437	1.76	7114	1 1 .		
77	12.48	482	1.64	6738	1 2 .		
67	14.34	553	1.46	6083	1 4 .		
59	16.26	626	1.3	5379	1 6 .		
54	17.94	692	1.19	4710	1 8 .		
47	20.54	791	1.06	3650	2 0 .		
41	23.23	893	0.95	3030	2 2 .		
36	26.93	1036	0.83	3030	2 8 .		
532	1.8	70	3.85	6800	M 0 8 1 2 1 . 8 _ M _ - _ _ 4 . 0 C - -	93	132M
474	2.03	79	3.58	6860	2 . 0		
386	2.48	97	3.12	6891	2 . 5		
343	2.8	110	2.85	6883	2 . 8		
295	3.26	128	2.58	6868	3 . 2		
266	3.62	141	2.21	7144	3 . 6		
243	3.96	155	1.93	6827	4 . 0		
214	4.48	176	1.84	7067	4 . 5		
190	5.05	198	1.71	6989	5 . 0		
157	6.12	240	1.53	7173	6 . 0		
134	7.14	279	1.36	6925	7 . 1		
122	7.85	307	1.26	6791	8 . 0		
115	8.33	322	3.97	16700	M 0 8 2 2 8 . 0 _ M _ - _ _ 4 . 0 C - -	125	132M
103	9.35	359	3.7	17000	9 . 0		
84	11.47	443	3.22	17500	1 1 .		
74	12.92	498	2.95	18100	1 2 .		
64	15.04	579	2.67	17670	1 4 .		
58	16.69	641	2.21	17998	1 6 .		
53	18.26	702	1.93	16537	1 8 .		
46	20.66	795	1.84	16025	2 0 .		
41	23.32	900	1.71	15909	2 2 .		
34	28.27	1087	1.52	15909	2 8 .		
29	32.97	1266	1.3	12812	3 2 .		
27	36.21	1392	1.18	11852	3 6 .		
22	44.38	1705	0.97	10159	4 5 .		
20	48.46	1859	0.89	8116	5 0 .		
52	18.43	713	3.7	27900	M 0 9 2 1 1 8 . _ M _ - _ _ 4 . 0 C - -	166	132M
47	20.59	800	3.58	29000	2 0 .		
42	22.87	886	3.22	29500	2 2 .		
37	26.04	1005	2.62	28425	2 5 .		
33	28.74	1110	2.38	28275	2 8 .		
30	32.31	1247	2.13	28250	3 2 .		
27	35.67	1377	1.95	27958	3 6 .		
24	40.25	1551	1.59	27904	4 0 .		
22	44.44	1712	1.44	29058	4 5 .		
20	49.07	1887	1.47	28652	5 0 .		
17	55.18	2113	0.92	28850	5 6 .		
16	61.13	2346	1.05	28677	6 3 .		
14	68.74	2634	0.92	27952	7 1 .		
32	29.99	1160	3.25	44300	M 1 0 2 1 2 8 . _ M _ - _ _ 4 . 0 C - -	212	132M
31	30.76	1183	3.72	44700	3 2 .		
27	35.44	1367	3.22	46600	3 6 .		
26	37.06	1422	2.92	47300	4 0 .		
22	42.7	1647	2.53	48566	4 5 .		
20	47.93	1838	2.3	47958	5 0 .		
19	51.49	1974	1.96	48027	5 6 .		
17	57.75	2212	1.88	47784	6 3 .		
15	62.05	2370	1.75	47481	7 1 .		
16	60.23	2295	1.64	49200	M 1 0 3 1 5 6 . _ M _ - _ _ 4 . 0 C - -	239	132M
14	66.93	2551	1.48	49000	6 3 .		
13	71.17	2709	1.63	48900	7 1 .		
12	79.08	3010	1.47	46358	8 0 .		
10	95.44	3633	1.04	44125	9 0 .		
8.7	109.97	4188	0.9	40408	1 0 0		
8.5	112.77	4291	1.03	40575	1 1 2		
7.4	129.94	4941	0.89	42575	1 2 5		
7.1	135.88	5164	0.81	42113	1 4 0		
17	56.93	2175	2.85	66700	M 1 3 3 1 5 6 . _ M _ - _ _ 4 . 0 C - -	294	132M
15	64.17	2455	2.53	66741	6 3 .		
13	71.32	2705	2.35	66616	7 1 .		
12	80.39	3049	2.08	66516	8 0 .		
11	90.75	3439	1.8	66437	9 0 .		
9.5	101.07	3827	1.62	66325	1 0 0		
8.4	113.69	4290	1.48	65988	1 1 2		
7.6	126.62	4774	1.33	65841	1 2 5		
6.9	139.07	5230	1.24	65700	1 4 0		
6.2	154.89	5819	1.11	65533	1 6 0		
5.5	173.37	6546	0.97	65287	1 8 0		
5.2	184.46	6978	0.91	65125	2 0 0		
4.5	212.09	8000	0.81	64837	2 2 5		
10	94.35	3580	3.1	80900	M 1 4 3 1 9 0 . _ M _ - _ _ 4 . 0 C - -	423	132M
9.4	102.23	3860	2.88	80900	1 0 0		
7.7	124.89	4710	2.34	80900	1 1 2		
7.1	135.31	5110	2.15	80900	1 2 5		
6.7	142.66	5358	1.88	80900	1 4 0		
6.2	154.57	5812	1.74	80900	1 6 0		
5.2	185.56	7006	1.57	80900	1 8 0		
4.6	208.15	7843	1.4	80798	2 0 0		
4.5	211.96	7968	1.27	80775	2 2 5		

NOTE

Other output speeds are available using 2 and 8 pole motors - Consult Textron Power Transmission

5.5 kW

4 POLE

N2 R/MIN Output Speed	i Ratio	M2 Nm Output Torque	Fm Service Factor	N Overhung Load	Unit Designation Column Entry 1 Through 20 Spaces to be filled when entering order	Kg Weight of base mount unit	Motor Size
399	3.58	127	1.59	4320	M 0 4 2 2 3 . 6 _ M _ - _ _ 5 . 5 K - -	70	112MA
284	5.04	179	1.32	4430	5 . 0		
253	5.65	200	1.24	4470	5 . 6		
226	6.34	226	1.16	4510	6 . 3		
178	8.05	287	1.01	4560	8 . 0		
157	9.13	325	0.92	4570	9 . 0		
399	3.58	127	2.3	4160	M 0 5 2 2 3 . 6 _ M _ - _ _ 5 . 5 K - -	70	112MA
284	5.04	180	2.12	4270	5 . 0		
253	5.65	201	2.04	4310	5 . 6		
226	6.34	225	1.83	4340	6 . 3		
178	8.05	287	1.56	4390	8 . 0		
157	9.13	326	1.38	4400	9 . 0		
131	10.89	389	1.16	4390	1 1 .		
114	12.54	447	0.95	4350	1 2 .		
98	14.58	520	0.86	3970	1 4 .		
1139	1.26	45	2.04	2750	M 0 6 1 2 1 . 2 _ M _ - _ _ 5 . 5 K - -	61	112MA
1015	1.41	51	1.83	2820	1 . 4		
799	1.79	64	1.62	2960	1 . 8		
705	2.03	73	1.46	3010	2 . 0		
591	2.42	87	1.26	2990	2 . 5		
513	2.79	101	0.95	2920	2 . 8		
441	3.24	117	0.93	2730	3 . 2		
322	4.44	157	2.3	7200	M 0 6 2 2 5 . 0 _ M _ - _ _ 5 . 5 K - -	75	112MA
229	6.24	223	2.12	7200	5 . 6		
204	6.99	249	2.04	7200	6 . 3		
182	7.85	279	1.83	7200	8 . 0		
143	9.97	356	1.67	7200	9 . 0		
127	11.3	403	1.5	7200	1 1 .		
106	13.48	480	1.27	7200	1 2 .		
92	15.52	554	0.95	7200	1 4 .		
79	18.05	644	0.93	7200	1 6 .		
71	20.2	719	0.87	7200	1 8 .		
66	21.53	767	0.82	7200	2 0 .		
1142	1.26	45	2.37	4340	M 0 7 1 2 1 . 2 _ M _ - _ _ 5 . 5 A - -	74	132SA
1039	1.39	49	2.37	4454	1 . 4		
795	1.81	65	2.37	4747	1 . 8		
699	2.06	73	2.37	4886	2 . 0		
576	2.5	89	2.06	5055	2 . 5		
524	2.75	98	1.95	5128	2 . 8		
456	3.16	113	1.84	5084	3 . 2		
402	3.58	128	1.7	5326	3 . 6		
364	3.95	142	1.54	4800	4 . 0		
318	4.53	162	1.35	4773	4 . 5		
281	5.12	183	1.19	4619	5 . 0		
1134	1.26	45	2.35	4340	M 0 7 1 2 1 . 2 _ M _ - _ _ 5 . 5 K - -	69	112MA
1031	1.39	50	2.35	4454	1 . 4		
790	1.81	65	2.35	4747	1 . 8		
695	2.06	74	2.35	4886	2 . 0		
572	2.5	90	2.04	5055	2 . 5		
520	2.75	99	1.94	5128	2 . 8		
453	3.16	114	1.83	5084	3 . 2		
399	3.58	129	1.69	5326	3 . 6		
362	3.95	143	1.53	4800	4 . 0		
316	4.53	163	1.34	4773	4 . 5		
279	5.12	185	1.18	4619	5 . 0		
392	3.68	129	2.37	7393	M 0 7 2 2 3 . 6 _ M _ - _ _ 5 . 5 A - -	88	132SA
283	5.09	179	2.37	7647	5 . 0		
252	5.72	201	2.37	7709	5 . 6		
229	6.29	221	2.37	7732	6 . 3		
175	8.22	292	2.17	7722	8 . 0		
154	9.34	330	2	7667	9 . 0		
127	11.35	401	1.78	6273	1 1 .		
115	12.48	441	1.67	5948	1 2 .		
100	14.34	507	1.49	5604	1 4 .		
89	16.26	574	1.37	5840	1 6 .		
80	17.94	634	1.25	6791	1 8 .		
70	20.54	725	1.11	6178	2 0 .		
62	23.23	818	0.99	3751	2 2 .		
53	26.93	949	0.87	2400	2 8 .		
389	3.68	130	2.35	7393	M 0 7 2 2 3 . 6 _ M _ - _ _ 5 . 5 K - -	83	112MA
281	5.09	180	2.35	7647	5 . 0		
250	5.72	203	2.35	7709	5 . 6		
227	6.29	223	2.35	7732	6 . 3		
174	8.22	294	2.15	7722	8 . 0		
153	9.34	333	1.99	7667	9 . 0		
126	11.35	404	1.77	6273	1 1 .		
115	12.48	444	1.66	5948	1 2 .		
100	14.34	511	1.48	5604	1 4 .		
88	16.26	578	1.36	5840	1 6 .		
80	17.94	638	1.24	6791	1 8 .		
70	20.54	730	1.1	6178	2 0 .		
62	23.23	824	0.99	3751	2 2 .		
53	26.93	956	0.86	2400	2 8 .		

NOTE

Other output speeds are available using 2 and 8 pole motors - Consult Textron Power Transmission

5.5 kW

4 POLE

N2 R/MIN Output Speed	i Ratio	M2 Nm Output Torque	Fm Service Factor	N Overhung Load	Unit Designation Column Entry 1 Through 20 Spaces to be filled when entering order	Kg Weight of base mount unit	Motor Size
798	1.8	65	3.65	6031	M 0 8 1 2 1 . 8 _ M _ - _ _ 5 . 5 A - -	89	132SA
711	2.03	73	3.39	6213	2 . 0		
580	2.48	89	2.98	6493	2 . 5		
514	2.8	101	2.71	6550	2 . 8		
442	3.26	117	2.46	6638	3 . 2		
398	3.62	129	2.29	6798	3 . 6		
364	3.96	142	2.09	6509	4 . 0		
322	4.48	160	1.93	6666	4 . 5		
285	5.05	182	1.75	6697	5 . 0		
235	6.12	220	1.48	6673	6 . 0		
202	7.14	256	1.29	6648	7 . 1		
184	7.85	281	1.2	6641	8 . 0		
173	8.33	295	3.95	15336	M 0 8 2 2 8 . 0 _ M _ - _ _ 5 . 5 A - -	121	132SA
154	9.35	331	3.68	15648	9 . 0		
126	11.47	405	3.23	16175	1 1 .		
111	12.92	455	2.94	16393	1 2 .		
96	15.04	534	2.65	16821	1 4 .		
86	16.69	586	2.42	15526	1 6 .		
79	18.26	643	2.11	15166	1 8 .		
70	20.66	728	2	15150	2 0 .		
62	23.32	828	1.86	15130	2 2 .		
51	28.27	994	1.6	14463	2 8 .		
44	32.97	1161	1.4	13907	3 2 .		
40	36.21	1274	1.29	13107	3 6 .		
32	44.38	1562	1.06	13268	4 5 .		
30	48.46	1704	0.97	12097	5 0 .		
70	20.59	728	3.88	25256	M 0 9 2 1 2 0 . _ M _ - _ _ 5 . 5 A - -	162	132SA
63	22.87	812	3.52	26068	2 2 .		
55	26.04	919	2.87	26609	2 5 .		
50	28.74	1015	2.6	27177	2 8 .		
45	32.31	1147	2.02	28168	3 2 .		
40	35.67	1258	1.86	27558	3 6 .		
36	40.25	1421	1.74	28377	4 0 .		
32	44.44	1570	1.57	29107	4 5 .		
29	49.07	1729	1.4	29046	5 0 .		
26	55.18	1939	1.04	28919	5 6 .		
24	61.13	2154	1.15	28821	6 3 .		
21	68.74	2416	1.02	28624	7 1 .		
48	29.99	1059	3.56	38534	M 1 0 2 1 2 8 . _ M _ - _ _ 5 . 5 A - -	208	132SA
41	35.44	1252	3.52	40553	3 6 .		
39	37.06	1309	3.18	41131	4 0 .		
34	42.7	1505	2.76	42931	4 5 .		
30	47.93	1681	2.49	44336	5 0 .		
28	51.49	1816	2.13	45266	5 6 .		
25	57.75	2020	2.06	46900	6 3 .		
23	62.05	2173	1.91	47854	7 1 .		
24	60.23	2100	1.79	29277	M 1 0 3 1 5 6 . _ M _ - _ _ 5 . 5 A - -	235	132SA
22	66.93	2332	1.62	29277	6 3 .		
20	71.17	2479	1.78	29277	7 1 .		
18	79.08	2753	1.6	46853	8 0 .		
15	95.44	3329	1.13	45738	9 0 .		
13	109.97	3831	0.98	44866	1 0 0		
13	112.77	3926	1.12	44866	1 1 2		
11	129.94	4522	0.98	43934	1 2 5		
11	135.88	4711	0.88	43739	1 4 0		
25	56.93	1981	3.12	66701	M 1 3 3 1 5 6 . _ M _ - _ _ 5 . 5 A - -	290	132SA
22	64.17	2244	2.76	66848	6 3 .		
20	71.32	2476	2.56	66731	7 1 .		
18	80.39	2791	2.28	66754	8 0 .		
16	90.75	3150	1.97	66650	9 0 .		
14	101.07	3507	1.77	66477	1 0 0		
13	113.69	3929	1.62	66161	1 1 2		
11	126.62	4374	1.45	65938	1 2 5		
10	139.07	4789	1.35	65838	1 4 0		
9.3	154.89	5331	1.21	65715	1 6 0		
8.3	173.37	6001	1.06	65436	1 8 0		
7.8	184.46	6394	0.99	65336	2 0 0		
6.8	212.09	7316	0.88	65042	2 2 5		
6.3	226.98	7789	0.82	64632	M 1 3 4 1 2 2 5 _ M _ - _ _ 5 . 5 K - -	326	112MA
17	86.76	3000	3.67	80900	M 1 4 3 1 8 0 . _ M _ - _ _ 5 . 5 A - -	419	132SA
15	94.35	3269	3.39	80900	9 0 .		
14	102.23	3553	3.12	80900	1 0 0		
12	124.89	4320	2.55	80900	1 1 2		
11	135.31	4686	2.35	80900	1 2 5		
10	142.66	4906	2.06	80900	1 4 0		
9.3	154.57	5327	1.9	80900	1 6 0		
7.8	185.56	6419	1.71	80900	1 8 0		
6.9	208.15	7183	1.53	80900	2 0 0		
6.8	211.96	7302	1.38	80900	2 2 5		
5.8	246.73	8476	1.25	80613	M 1 4 4 1 2 2 5 _ M _ - _ _ 5 . 5 K - -	442	112MA
5.3	271.4	9321	1.14	80613	2 5 0		
4.6	311.86	10705	0.99	80613	2 8 0		
4	353.64	12121	0.87	80613	3 0 0		

NOTE

Other output speeds are available using 2 and 8 pole motors - Consult Textron Power Transmission

0205

5.5 kW

6 POLE

N2 R/MIN	i	M2 Nm	Fm	N	Unit Designation	Kg	
Output Speed	Ratio	Output Torque	Service Factor	Overhung Load	Column Entry 1 Through 20 Spaces to be filled when entering order	Weight of base mount unit	Motor Size
761	1.26	68	1.57	4600	M 0 7 1 2 1 . 2 _ M _ - _ _ 5 . 5 C - -	78	132M
692	1.39	75	1.57	4710	1 . 4		
530	1.81	97	1.57	4820	1 . 8		
466	2.06	111	1.57	4790	2 . 0		
384	2.5	135	1.37	4740	2 . 5		
349	2.75	148	1.3	4690	2 . 8		
304	3.16	170	1.23	4500	3 . 2		
268	3.58	193	1.13	4800	3 . 6		
243	3.95	213	1.03	4030	4 . 0		
212	4.53	244	0.9	3730	4 . 5		
261	3.68	195	1.57	7690	M 0 7 2 2 3 . 6 _ M _ - _ _ 5 . 5 C - -	92	132M
188	5.09	270	1.57	8020	5 . 0		
168	5.72	303	1.57	8120	5 . 6		
153	6.29	334	1.57	8180	6 . 3		
117	8.22	436	1.57	7200	8 . 0		
103	9.34	495	1.5	6720	9 . 0		
85	11.35	602	1.28	5860	1 1 .		
77	12.48	662	1.2	5320	1 2 .		
67	14.34	760	1.06	4379	1 4 .		
59	16.26	861	0.95	3369	1 6 .		
54	17.94	952	0.87	2409	1 8 .		
765	1.25	67	3.16	6036	M 0 8 1 2 1 . 2 _ M _ - _ _ 5 . 5 C - -	93	132M
688	1.4	75	3.16	6193	1 . 4		
532	1.8	97	2.8	6536	1 . 8		
474	2.03	109	2.6	6560	2 . 0		
386	2.48	134	2.27	6488	2 . 5		
343	2.8	151	2.07	6394	2 . 8		
295	3.26	176	1.87	6292	3 . 2		
266	3.62	195	1.61	6648	3 . 6		
243	3.96	213	1.41	6067	4 . 0		
214	4.48	242	1.33	6430	4 . 5		
190	5.05	272	1.24	6226	5 . 0		
157	6.12	330	1.11	6400	6 . 0		
134	7.14	384	0.99	5930	7 . 1		
122	7.85	422	0.92	5680	8 . 0		
261	3.68	195	3.16	14328	M 0 8 2 2 3 . 6 _ M _ - _ _ 5 . 5 C - -	125	132M
184	5.21	276	3.16	15164	5 . 0		
166	5.79	307	3.16	15442	5 . 6		
149	6.44	341	3.16	15614	6 . 3		
115	8.33	442	2.89	15800	8 . 0		
103	9.35	494	2.69	15821	9 . 0		
84	11.47	609	2.35	15777	1 1 .		
74	12.92	685	2.15	15980	1 2 .		
64	15.04	796	1.95	15225	1 4 .		
58	16.69	882	1.61	15146	1 6 .		
53	18.26	966	1.41	13651	1 8 .		
46	20.66	1094	1.33	12713	2 0 .		
41	23.32	1238	1.24	12500	2 2 .		
34	28.27	1495	1.1	12500	2 8 .		
29	32.97	1741	0.95	8500	3 2 .		
27	36.21	1914	0.86	6963	3 6 .		
66	14.53	774	3.69	25700	M 0 9 2 1 1 4 . _ M _ - _ _ 5 . 5 C - -	166	132M
58	16.59	885	2.98	25816	1 6 .		
52	18.43	981	2.69	26386	1 8 .		
47	20.59	1100	2.6	27367	2 0 .		
42	22.87	1219	2.35	27621	2 2 .		
37	26.04	1382	1.91	26812	2 5 .		
33	28.74	1526	1.73	26437	2 8 .		
30	32.31	1715	1.55	26375	3 2 .		
27	35.67	1894	1.42	25795	3 6 .		
24	40.25	2132	1.16	26575	4 0 .		
22	44.44	2354	1.05	28690	4 5 .		
20	49.07	2595	1.07	28030	5 0 .		
32	29.99	1595	2.36	42700	M 1 0 2 1 2 8 . _ M _ - _ _ 5 . 5 C - -	212	132M
31	30.76	1627	2.71	43141	3 2 .		
27	35.44	1880	2.35	44541	3 6 .		
26	37.06	1955	2.13	45717	4 0 .		
22	42.7	2265	1.84	47316	4 5 .		
20	47.93	2528	1.67	46245	5 0 .		
19	51.49	2714	1.43	46800	5 6 .		
17	57.75	3042	1.37	46437	6 3 .		
15	62.05	3259	1.28	46050	7 1 .		
16	60.23	3156	1.19	49200	M 1 0 3 1 5 6 . _ M _ - _ _ 5 . 5 C - -	239	132M
14	66.93	3508	1.07	49000	6 3 .		
13	71.17	3725	1.18	48900	7 1 .		
12	79.08	4139	1.07	44490	8 0 .		
27	35.52	1867	3.4	66700	M 1 3 2 1 3 6 . _ M _ - _ _ 5 . 5 C - -	272	132M
25	39.01	2041	3.16	66700	4 0 .		
22	43.45	2277	2.84	66600	4 5 .		
24	39.93	2094	2.84	66700	M 1 3 3 1 4 0 . _ M _ - _ _ 5 . 5 C - -	294	132M
22	44.18	2312	2.75	66600	4 5 .		
19	50.02	2606	2.44	66500	5 0 .		
17	56.93	2991	2.07	66637	5 6 .		
15	64.17	3376	1.84	66654	6 3 .		
13	71.32	3719	1.71	66491	7 1 .		
12	80.39	4192	1.51	66391	8 0 .		
11	90.75	4729	1.31	66193	9 0 .		
9.5	101.07	5262	1.18	66062	1 0 0		
8.4	113.69	5899	1.08	65479	1 1 2		
7.6	126.62	6564	0.97	65266	1 2 5		
6.9	139.07	7192	0.9	65100	1 4 0		
6.2	154.89	8002	0.81	64833	1 6 0		
16	59.46	3098	3.58	80900	M 1 4 3 1 5 6 . _ M _ - _ _ 5 . 5 C - -	423	132M
15	65.55	3429	3.24	80900	6 3 .		
12	78.7	4087	2.69	80900	7 1 .		
11	86.76	4514	2.44	80900	8 0 .		
10	94.35	4923	2.25	80900	9 0 .		
9.4	102.23	5308	2.09	80900	1 0 0		
7.7	124.89	6477	1.7	80900	1 1 2		
7.1	135.31	7026	1.57	80900	1 2 5		
6.7	142.66	7367	1.37	80900	1 4 0		
6.2	154.57	7992	1.26	80900	1 6 0		
5.2	185.56	9633	1.14	80900	1 8 0		
4.6	208.15	10784	1.02	80713	2 0 0		
4.5	211.96	10956	0.92	80700	2 2 5		

NOTE

Other output speeds are available using 2 and 8 pole motors - Consult Textron Power Transmission

7.5 kW

4 POLE

N2 R/MIN Output Speed	i Ratio	M2 Nm Output Torque	Fm Service Factor	N Overhung Load	Unit Designation Column Entry 1 Through 20 Spaces to be filled when entering order	Kg Weight of base mount unit	Motor Size
1146	1.26	61	1.74	4155	M 0 7 1 2 1 . 2 _ M _ - _ _ 7 . 5 A - -	78	132M
1042	1.39	67	1.74	4260	1 . 4		
798	1.81	88	1.74	4497	1 . 8		
702	2.06	100	1.74	4611	2 . 0		
578	2.5	122	1.51	4700	2 . 5		
525	2.75	134	1.44	4794	2 . 8		
457	3.16	154	1.36	4692	3 . 2		
403	3.58	174	1.25	5010	3 . 6		
393	3.68	175	1.74	7265	M 0 7 2 2 3 . 6 _ M _ - _ _ 7 . 5 A - -	92	132M
284	5.09	244	1.74	7470	5 . 0		
253	5.72	274	1.74	7415	5 . 6		
230	6.29	301	1.74	7310	6 . 3		
176	8.22	396	1.59	6860	8 . 0		
155	9.34	449	1.47	6545	9 . 0		
127	11.35	545	1.31	5134	1 1 .		
116	12.48	599	1.23	4621	1 2 .		
101	14.34	689	1.1	3952	1 4 .		
89	16.26	780	1.01	4148	1 6 .		
81	17.94	862	0.92	5440	1 8 .		
70	20.54	985	0.82	4570	2 0 .		
1151	1.25	61	3.3	5320	M 0 8 1 2 1 . 2 _ M _ - _ _ 7 . 5 A - -	93	132M
1035	1.4	68	3.11	5458	1 . 4		
801	1.8	88	2.68	5799	1 . 8		
713	2.03	99	2.5	5949	2 . 0		
582	2.48	121	2.19	6151	2 . 5		
516	2.8	137	1.99	6137	2 . 8		
443	3.26	159	1.81	6245	3 . 2		
400	3.62	176	1.69	6430	3 . 6		
365	3.96	193	1.54	5964	4 . 0		
323	4.48	218	1.42	6170	4 . 5		
286	5.05	247	1.28	6140	5 . 0		
393	3.68	175	3.49	13458	M 0 8 2 2 3 . 6 _ M _ - _ _ 7 . 5 A - -	125	132M
277	5.21	250	3.49	13997	5 . 0		
249	5.79	278	3.49	14177	5 . 6		
224	6.44	311	3.37	14357	6 . 3		
173	8.33	402	2.91	14612	8 . 0		
155	9.35	450	2.71	14670	9 . 0		
126	11.47	550	2.38	14656	1 1 .		
112	12.92	618	2.17	14523	1 2 .		
96	15.04	726	1.95	14395	1 4 .		
87	16.69	797	1.78	13028	1 6 .		
79	18.26	874	1.55	12740	1 8 .		
70	20.66	989	1.47	12230	2 0 .		
62	23.32	1125	1.37	11635	2 2 .		
51	28.27	1352	1.18	10034	2 8 .		
44	32.97	1578	1.03	10100	3 2 .		
40	36.21	1731	0.95	8800	3 6 .		
113	12.74	615	3.93	22600	M 0 9 2 1 1 2 . _ M _ - _ _ 7 . 5 A - -	166	132M
99	14.53	702	3.6	23200	1 4 .		
87	16.59	801	3.27	23212	1 6 .		
78	18.43	886	2.98	23415	1 8 .		
70	20.59	990	2.86	24134	2 0 .		
63	22.87	1103	2.59	24702	2 2 .		
55	26.04	1249	2.11	25554	2 5 .		
50	28.74	1379	1.91	25813	2 8 .		
45	32.31	1558	1.49	26659	3 2 .		
41	35.67	1709	1.37	25925	3 6 .		
36	40.25	1932	1.28	27400	4 0 .		
33	44.44	2134	1.16	28800	4 5 .		
29	49.07	2350	1.03	28700	5 0 .		
56	26.03	1249	3.02	36300	M 1 0 2 1 2 5 . _ M _ - _ _ 7 . 5 A - -	212	132M
48	29.99	1440	2.62	37839	2 8 .		
47	30.76	1475	2.99	38185	3 2 .		
41	35.44	1702	2.59	39480	3 6 .		
39	37.06	1778	2.34	40372	4 0 .		
34	42.7	2046	2.03	42040	4 5 .		
30	47.93	2285	1.83	43318	5 0 .		
28	51.49	2468	1.57	44200	5 6 .		
25	57.75	2746	1.51	45700	6 3 .		
23	62.05	2953	1.41	46576	7 1 .		
24	60.23	2854	1.32	29100	M 1 0 3 1 5 6 . _ M _ - _ _ 7 . 5 A - -	239	132M
22	66.93	3170	1.19	29100	6 3 .		
20	71.17	3369	1.31	29100	7 1 .		
18	79.08	3741	1.18	45200	8 0 .		
15	95.44	4525	0.83	43700	9 0 .		
13	112.77	5335	0.83	42500	1 1 2		
41	35.52	1688	3.76	66500	M 1 3 2 1 3 6 . _ M _ - _ _ 7 . 5 A - -	272	132M
37	39.01	1855	3.48	66800	4 0 .		
33	43.45	2060	3.14	66700	4 5 .		
25	56.93	2692	2.3	66670	M 1 3 3 1 5 6 . _ M _ - _ _ 7 . 5 A - -	294	132M
23	64.17	3049	2.03	66779	6 3 .		
20	71.32	3365	1.89	66640	7 1 .		
18	80.39	3792	1.67	66637	8 0 .		
16	90.75	4280	1.45	66450	9 0 .		
14	101.07	4766	1.3	66300	1 0 0		
13	113.69	5339	1.19	65700	1 1 2		
11	126.62	5944	1.07	65400	1 2 5		
10	139.07	6508	0.99	65300	1 4 0		
9.3	154.89	7245	0.89	65100	1 6 0		
24	59.46	2812	3.73	66400	M 1 4 3 1 5 6 . _ M _ - _ _ 7 . 5 A - -	423	132M
22	65.55	3097	3.45	66400	6 3 .		
18	78.7	3712	2.96	66400	7 1 .		
17	86.76	4078	2.7	80900	8 0 .		
15	94.35	4443	2.5	80900	9 0 .		
14	102.23	4828	2.3	80900	1 0 0		
12	124.89	5871	1.87	80900	1 1 2		
11	135.31	6368	1.73	80900	1 2 5		
10	142.66	6667	1.51	80900	1 4 0		
9.3	154.57	7239	1.4	80900	1 6 0		
7.8	185.56	8723	1.26	80900	1 8 0		
6.9	208.15	9762	1.13	80900	2 0 0		
6.8	211.96	9923	1.02	80900	2 2 5		

NOTE

Other output speeds are available using 2 and 8 pole motors - Consult Textron Power Transmission

7.5 kW

6 POLE

N2 R/MIN Output Speed	i Ratio	M2 Nm Output Torque	Fm Service Factor	N Overhung Load	Unit Designation Column Entry 1 Through 20 Spaces to be filled when entering order	Kg Weight of base mount unit	Motor Size
765	1.25	92	2.32	5765	M 0 8 1 2 1 . 2 _ M _ - _ _ 7 . 5 C - -	127	160MA
688	1.4	103	2.32	5905	1 . 4		
532	1.8	132	2.05	6185	1 . 8		
474	2.03	149	1.91	6160	2 . 0		
386	2.48	183	1.67	5950	2 . 5		
343	2.8	206	1.52	5741	2 . 8		
295	3.26	241	1.37	5524	3 . 2		
266	3.62	266	1.18	5987	3 . 6		
243	3.96	291	1.03	5053	4 . 0		
214	4.48	330	0.98	5580	4 . 5		
190	5.05	371	0.91	5210	5 . 0		
261	3.68	265	2.32	14100	M 0 8 2 2 3 . 6 _ M _ - _ _ 7 . 5 C - -	159	160MA
184	5.21	377	2.32	14850	5 . 0		
166	5.79	419	2.32	15100	5 . 6		
149	6.44	465	2.32	15100	6 . 3		
115	8.33	603	2.12	14600	8 . 0		
103	9.35	673	1.97	14250	9 . 0		
84	11.47	831	1.72	13480	1 1 .		
74	12.92	934	1.57	13155	1 2 .		
64	15.04	1086	1.43	11965	1 4 .		
58	16.69	1203	1.18	11344	1 6 .		
53	18.26	1317	1.03	9803	1 8 .		
46	20.66	1491	0.98	8297	2 0 .		
41	23.32	1688	0.91	7954	2 2 .		
34	28.27	2038	0.81	7954	2 8 .		
117	8.22	597	3.95	22500	M 0 9 2 1 8 . 0 _ M _ - _ _ 7 . 5 C - -	200	160MA
104	9.19	668	3.67	23000	9 . 0		
94	10.27	747	3.39	23300	1 0 .		
82	11.71	849	3.11	22983	1 1 .		
75	12.74	925	2.96	23358	1 2 .		
66	14.53	1056	2.71	24062	1 4 .		
58	16.59	1207	2.19	24105	1 6 .		
52	18.43	1337	1.97	24368	1 8 .		
47	20.59	1500	1.91	25190	2 0 .		
42	22.87	1662	1.72	25117	2 2 .		
37	26.04	1885	1.4	24662	2 5 .		
33	28.74	2082	1.27	23987	2 8 .		
30	32.31	2338	1.14	23875	3 2 .		
27	35.67	2583	1.04	22912	3 6 .		
24	40.25	2908	0.85	24802	4 0 .		
58	16.43	1193	3.16	35800	M 1 0 2 1 1 6 . _ M _ - _ _ 7 . 5 C - -	246	160MA
53	18.25	1321	2.85	36900	1 8 .		
49	19.41	1407	3.13	37700	2 0 .		
45	21.57	1560	2.83	38800	2 2 .		
37	26.03	1885	2	40900	2 5 .		
32	29.99	2175	1.73	40566	2 8 .		
31	30.76	2219	1.99	41063	3 2 .		
27	35.44	2563	1.72	41797	3 6 .		
26	37.06	2666	1.56	43606	4 0 .		
22	42.7	3089	1.35	45650	4 5 .		
20	47.93	3447	1.22	43962	5 0 .		
19	51.49	3702	1.05	45163	5 6 .		
17	57.75	4148	1	44642	6 3 .		
15	62.05	4444	0.94	44140	7 1 .		
16	60.23	4303	0.88	49200	M 1 0 3 1 5 6 . _ M _ - _ _ 7 . 5 C - -	272	160MA
13	71.17	5080	0.87	48900	7 1 .		
38	25.45	1830	3.39	66800	M 1 3 2 1 2 5 . _ M _ - _ _ 7 . 5 C - -	307	160MA
34	28.35	2039	3.04	66700	2 8 .		
30	31.89	2289	2.77	66600	3 2 .		
27	35.52	2546	2.49	65973	3 6 .		
25	39.01	2784	2.32	65712	4 0 .		
22	43.45	3105	2.08	66345	4 5 .		
24	39.93	2855	2.08	66700	M 1 3 3 1 4 0 . _ M _ - _ _ 7 . 5 C - -	329	160MA
22	44.18	3153	2.01	66600	4 5 .		
19	50.02	3554	1.79	66500	5 0 .		
17	56.93	4078	1.52	66555	5 6 .		
15	64.17	4603	1.35	66538	6 3 .		
13	71.32	5071	1.25	66325	7 1 .		
12	80.39	5717	1.11	66225	8 0 .		
11	90.75	6449	0.96	65868	9 0 .		
9.5	101.07	7175	0.86	65712	1 0 0		
24	39.42	2815	3.59	80900	M 1 4 2 1 4 0 . _ M _ - _ _ 7 . 5 C - -	415	160MA
22	42.71	3054	3.31	80900	4 5 .		
23	41.36	2960	3.55	66400	M 1 4 3 1 4 0 . _ M _ - _ _ 7 . 5 C - -	460	160MA
20	48.21	3423	3.21	66400	4 5 .		
18	54.75	3891	2.83	66400	5 0 .		
16	59.46	4225	2.63	80900	5 6 .		
15	65.55	4676	2.37	80900	6 3 .		
12	78.7	5574	1.97	80900	7 1 .		
11	86.76	6156	1.79	80900	8 0 .		
10	94.35	6713	1.65	80900	9 0 .		
9.4	102.23	7239	1.53	80900	1 0 0		
7.7	124.89	8832	1.25	80900	1 1 2		
7.1	135.31	9581	1.15	80900	1 2 5		
6.7	142.66	10046	1.01	80900	1 4 0		
6.2	154.57	10899	0.93	80900	1 6 0		
5.2	185.56	13136	0.84	80900	1 8 0		

NOTE

Other output speeds are available using 2 and 8 pole motors - Consult Textron Power Transmission

9.2 kW

4 POLE

N2 R/MIN	i	M2 Nm	Fm	N	Unit Designation	Kg	
Output Speed	Ratio	Output Torque	Service Factor	Overhung Load	Column Entry 1 Through 20 Spaces to be filled when entering order	Weight of base mount unit	Motor Size
1142	1.26	75	1.41	3997	M 0 7 1 2 1 . 2 _ M _ - _ _ 9 . 2 K - -	104	132MA
1039	1.39	83	1.41	4094	1 . 4		
795	1.81	108	1.41	4285	1 . 8		
699	2.06	123	1.41	4377	2 . 0		
576	2.5	150	1.23	4399	2 . 5		
524	2.75	165	1.17	4510	2 . 8		
456	3.16	189	1.1	4360	3 . 2		
392	3.68	216	1.41	7155	M 0 7 2 2 3 . 6 _ M _ - _ _ 9 . 2 K - -	118	132MA
283	5.09	300	1.41	7319	5 . 0		
252	5.72	337	1.41	7164	5 . 6		
229	6.29	371	1.41	6950	6 . 3		
175	8.22	488	1.3	6126	8 . 0		
154	9.34	553	1.2	5590	9 . 0		
127	11.35	672	1.07	4165	1 1 .		
115	12.48	737	1	3494	1 2 .		
100	14.34	849	0.89	2547	1 4 .		
89	16.26	960	0.82	2710	1 6 .		

NOTE

Other output speeds are available using 2 and 8 pole motors - Consult Textron Power Transmission

11.0 kW

4 POLE

N2 R/MIN Output Speed	i Ratio	M2 Nm Output Torque	Fm Service Factor	N Overhung Load	Unit Designation Column Entry 1 Through 20 Spaces to be filled when entering order	Kg Weight of base mount unit	Motor Size
1142	1.26	90	1.18	3830	M 0 7 1 2 1 . 2 _ M _ - _ _ 1 1 . K - -	114	132MB
1039	1.39	99	1.18	3920	1 . 4		
795	1.81	130	1.18	4060	1 . 8		
699	2.06	147	1.18	4130	2 . 0		
576	2.5	179	1.03	4080	2 . 5		
392	3.68	258	1.18	7040	M 0 7 2 2 3 . 6 _ M _ - _ _ 1 1 . K - -	128	132MB
283	5.09	359	1.18	7160	5 . 0		
252	5.72	403	1.18	6900	5 . 6		
229	6.29	443	1.18	6570	6 . 3		
175	8.22	584	1.08	5350	8 . 0		
154	9.34	661	1	4580	9 . 0		
127	11.35	803	0.89	3140	1 1 .		
115	12.48	882	0.83	2300	1 2 .		
1155	1.25	90	2.25	5007	M 0 8 1 2 1 . 2 _ M _ - _ _ 1 1 . A - -	127	160MA
1039	1.4	100	2.13	5122	1 . 4		
803	1.8	129	1.84	5393	1 . 8		
716	2.03	145	1.71	5487	2 . 0		
584	2.48	178	1.5	5553	2 . 5		
518	2.8	200	1.36	5415	2 . 8		
445	3.26	232	1.24	5556	3 . 2		
401	3.62	257	1.15	5784	3 . 6		
366	3.96	283	1.05	5012	4 . 0		
394	3.68	257	2.39	13197	M 0 8 2 2 3 . 6 _ M _ - _ _ 1 1 . A - -	159	160MA
278	5.21	365	2.39	13625	5 . 0		
250	5.79	406	2.39	13768	5 . 6		
225	6.44	454	2.31	13910	6 . 3		
174	8.33	587	1.99	13346	8 . 0		
155	9.35	657	1.85	12957	9 . 0		
126	11.47	805	1.63	11998	1 1 .		
112	12.92	904	1.48	11250	1 2 .		
96	15.04	1062	1.34	10151	1 4 .		
87	16.69	1165	1.22	8656	1 6 .		
79	18.26	1278	1.06	8493	1 8 .		
70	20.66	1446	1.01	7120	2 0 .		
62	23.32	1644	0.94	5517	2 2 .		
51	28.27	1976	0.8	2284	2 8 .		
196	7.4	522	3.83	20209	M 0 9 2 1 7 . 1 _ M _ - _ _ 1 1 . A - -	200	160MA
176	8.22	579	3.59	20624	8 . 0		
158	9.19	648	3.35	21072	9 . 0		
141	10.27	726	3.08	20720	1 0 .		
124	11.71	827	2.83	21211	1 1 .		
114	12.74	899	2.69	21464	1 2 .		
100	14.53	1026	2.46	21675	1 4 .		
87	16.59	1171	2.24	21760	1 6 .		
79	18.43	1296	2.04	21601	1 8 .		
70	20.59	1447	1.95	22170	2 0 .		
63	22.87	1613	1.77	22312	2 2 .		
56	26.04	1826	1.45	23709	2 5 .		
50	28.74	2016	1.31	23427	2 8 .		
45	32.31	2278	1.02	24018	3 2 .		
41	35.67	2499	0.94	23066	3 6 .		
36	40.25	2824	0.87	25688	4 0 .		
88	16.43	1155	3.26	32215	M 1 0 2 1 1 6 . _ M _ - _ _ 1 1 . A - -	246	160MA
79	18.25	1283	2.94	32896	1 8 .		
75	19.41	1362	3.24	33324	2 0 .		
67	21.57	1515	2.91	32667	2 2 .		
56	26.03	1826	2.06	35310	2 5 .		
48	29.99	2105	1.79	36623	2 8 .		
47	30.76	2156	2.05	37054	3 2 .		
41	35.44	2487	1.77	37602	3 6 .		
39	37.06	2600	1.6	39044	4 0 .		
34	42.7	2990	1.39	40481	4 5 .		
30	47.93	3339	1.25	41536	5 0 .		
28	51.49	3607	1.07	42333	5 6 .		
25	57.75	4014	1.04	43600	6 3 .		
23	62.05	4316	0.96	44339	7 1 .		
24	60.23	4172	0.9	28788	M 1 0 3 1 5 6 . _ M _ - _ _ 1 1 . A - -	272	160MA
22	66.93	4633	0.81	28788	6 3 .		
20	71.17	4924	0.9	28788	7 1 .		
57	25.45	1780	3.48	60039	M 1 3 2 1 2 5 . _ M _ - _ _ 1 1 . A - -	307	160MA
51	28.35	1982	3.13	61744	2 8 .		
45	31.89	2224	2.85	63271	3 2 .		
41	35.52	2468	2.57	65208	3 6 .		
37	39.01	2712	2.38	65228	4 0 .		
33	43.45	3011	2.15	66000	4 5 .		
36	39.93	2777	1.99	50560	M 1 3 3 1 4 0 . _ M _ - _ _ 1 1 . A - -	329	160MA
33	44.18	3057	2.02	50560	4 5 .		
29	50.02	3453	1.83	50560	5 0 .		
25	56.93	3935	1.57	66616	5 6 .		
23	64.17	4457	1.39	66658	6 3 .		
20	71.32	4919	1.29	66481	7 1 .		
18	80.39	5543	1.15	66433	8 0 .		
16	90.75	6256	0.99	66100	9 0 .		
14	101.07	6966	0.89	65988	1 0 0		
37	39.42	2740	3.63	80924	M 1 4 2 1 4 0 . _ M _ - _ _ 1 1 . A - -	415	160MA
34	42.71	2964	3.37	80900	4 5 .		
35	41.36	2857	3.41	66432	M 1 4 3 1 4 0 . _ M _ - _ _ 1 1 . A - -	460	160MA
30	48.21	3324	3.31	66432	4 5 .		
26	54.75	3769	2.92	66432	5 0 .		
24	59.46	4110	2.55	66275	5 6 .		
22	65.55	4526	2.36	66275	6 3 .		
18	78.7	5426	2.03	66206	7 1 .		
17	86.76	5960	1.85	80900	8 0 .		
15	94.35	6494	1.71	80900	9 0 .		
14	102.23	7057	1.57	80900	1 0 0		
12	124.89	8581	1.28	80900	1 1 2		
11	135.31	9307	1.18	80900	1 2 5		
10	142.66	9745	1.04	80900	1 4 0		
9.4	154.57	10580	0.95	80900	1 6 0		

NOTE

Other output speeds are available using 2 and 8 pole motors - Consult Textron Power Transmission

11.0 kW

6 POLE

N2 R/MIN Output Speed	i Ratio	M2 Nm Output Torque	Fm Service Factor	N Overhung Load	Unit Designation Column Entry 1 Through 20 Spaces to be filled when entering order	Kg Weight of base mount unit	Motor Size
769	1.25	135	1.59	5290	M 0 8 1 2 1 . 2 _ M _ - _ _ 1 1 . C - -	141	160L
691	1.4	150	1.59	5400	1 . 4		
535	1.8	193	1.41	5570	1 . 8		
476	2.03	218	1.31	5460	2 . 0		
388	2.48	267	1.14	5010	2 . 5		
345	2.8	301	1.04	4600	2 . 8		
296	3.26	351	0.94	4180	3 . 2		
267	3.62	388	0.81	4830	3 . 6		
262	3.68	388	1.59	13700	M 0 8 2 2 3 . 6 _ M _ - _ _ 1 1 . C - -	173	160L
185	5.21	550	1.59	14300	5 . 0		
167	5.79	611	1.59	14500	5 . 6		
150	6.44	679	1.59	14200	6 . 3		
116	8.33	880	1.45	12500	8 . 0		
103	9.35	983	1.35	11500	9 . 0		
84	11.47	1213	1.18	9460	1 1 .		
75	12.92	1363	1.08	8210	1 2 .		
64	15.04	1585	0.98	6260	1 4 .		
58	16.69	1755	0.81	4690	1 6 .		
262	3.69	394	2.76	19200	M 0 9 2 1 3 . 6 _ M _ - _ _ 1 1 . C - -	214	160L
211	4.58	488	3.89	20000	4 . 5		
190	5.07	538	3.67	20400	5 . 0		
170	5.69	602	3.42	20800	5 . 6		
146	6.63	702	3.09	21200	6 . 3		
130	7.4	785	2.88	21135	7 . 1		
117	8.22	872	2.7	21442	8 . 0		
105	9.19	974	2.51	21615	9 . 0		
94	10.27	1089	2.32	21371	1 0 .		
82	11.71	1239	2.13	20678	1 1 .		
76	12.74	1350	2.03	21011	1 2 .		
66	14.53	1541	1.86	21196	1 4 .		
58	16.59	1761	1.5	21111	1 6 .		
52	18.43	1951	1.35	20837	1 8 .		
47	20.59	2188	1.31	21381	2 0 .		
42	22.87	2426	1.18	20734	2 2 .		
37	26.04	2751	0.96	20900	2 5 .		
34	28.74	3037	0.87	19700	2 8 .		
91	10.59	1121	3.36	32000	M 1 0 2 1 1 0 . _ M _ - _ _ 1 1 . C - -	260	160L
81	11.98	1269	2.97	32600	1 1 .		
77	12.51	1322	3.33	32900	1 2 .		
68	14.16	1498	2.94	33600	1 4 .		
59	16.43	1740	2.17	33980	1 6 .		
53	18.25	1927	1.96	34597	1 8 .		
50	19.41	2053	2.15	35273	2 0 .		
45	21.57	2276	1.94	35797	2 2 .		
37	26.03	2750	1.37	37882	2 5 .		
32	29.99	3173	1.19	36833	2 8 .		
31	30.76	3238	1.36	37427	3 2 .		
27	35.44	3740	1.18	36994	3 6 .		
26	37.06	3890	1.07	39913	4 0 .		
23	42.7	4507	0.92	42733	4 5 .		
20	47.93	5030	0.84	39966	5 0 .		
54	18	1900	3.26	60900	M 1 3 2 1 1 8 . _ M _ - _ _ 1 1 . C - -	321	160L
48	20	2105	3.02	62800	2 0 .		
43	22.55	2371	2.68	64800	2 2 .		
38	25.45	2671	2.32	64812	2 5 .		
34	28.35	2975	2.08	64896	2 8 .		
30	31.89	3340	1.9	64772	3 2 .		
27	35.52	3715	1.71	64702	3 6 .		
25	39.01	4062	1.59	63983	4 0 .		
22	43.45	4531	1.43	65900	4 5 .		
24	39.93	4166	1.43	66700	M 1 3 3 1 4 0 . _ M _ - _ _ 1 1 . C - -	343	160L
22	44.18	4601	1.38	66600	4 5 .		
19	50.02	5185	1.22	66500	5 0 .		
17	56.93	5951	1.04	66410	5 6 .		
15	64.17	6717	0.92	66335	6 3 .		
14	71.32	7400	0.86	66033	7 1 .		
34	28.25	2967	3.36	80900	M 1 4 2 1 2 8 . _ M _ - _ _ 1 1 . C - -	429	160L
28	34.51	3625	2.95	80900	3 2 .		
26	37.39	3913	2.76	80900	3 6 .		
24	39.42	4108	2.46	80853	4 0 .		
23	42.71	4456	2.27	80864	4 5 .		
23	41.36	4319	2.43	66135	M 1 4 3 1 4 0 . _ M _ - _ _ 1 1 . C - -	474	160L
20	48.21	4994	2.2	66135	4 5 .		
18	54.75	5677	1.94	66135	5 0 .		
16	59.46	6165	1.8	80900	5 6 .		
15	65.55	6824	1.63	80900	6 3 .		
12	78.7	8133	1.35	80900	7 1 .		
11	86.76	8983	1.22	80900	8 0 .		
10	94.35	9795	1.13	80900	9 0 .		
9.4	102.23	10562	1.05	80900	1 0 0		
7.7	124.89	12887	0.85	80900	1 1 2		

NOTE

Other output speeds are available using 2 and 8 pole motors - Consult Textron Power Transmission

0205

15.0 kW

4 POLE

N2 R/MIN	i	M2 Nm	Fm	N	Unit Designation	Kg	
Output Speed	Ratio	Output Torque	Service Factor	Overhung Load	Column Entry 1 Through 20 Spaces to be filled when entering order	Weight of base mount unit	Motor Size
1159	1.25	122	1.66	4650	M 0 8 1 2 1 . 2 _ M _ - _ _ 1 5 . A - -	141	160L
1042	1.4	136	1.57	4740	1 . 4		
806	1.8	176	1.35	4930	1 . 8		
718	2.03	197	1.26	4960	2 . 0		
586	2.48	241	1.1	4870	2 . 5		
520	2.8	273	1	4590	2 . 8		
396	3.68	349	1.76	12900	M 0 8 2 2 3 . 6 _ M _ - _ _ 1 5 . A - -	173	160L
279	5.21	496	1.76	13200	5 . 0		
251	5.79	552	1.76	13300	5 . 6		
226	6.44	617	1.7	13400	6 . 3		
175	8.33	798	1.47	11900	8 . 0		
156	9.35	893	1.36	11000	9 . 0		
127	11.47	1093	1.2	8959	1 1 .		
113	12.92	1228	1.09	7509	1 2 .		
97	15.04	1444	0.98	5299	1 4 .		
87	16.69	1584	0.9	3659	1 6 .		
441	3.3	319	3.41	17400	M 0 9 2 1 3 . 2 _ M _ - _ _ 1 5 . A - -	214	160L
394	3.69	356	3.06	18000	3 . 6		
318	4.58	440	3.81	18700	4 . 5		
287	5.07	487	3.59	18900	5 . 0		
256	5.69	544	3.34	19200	5 . 6		
220	6.63	636	3.02	19500	6 . 3		
197	7.4	710	2.82	19772	7 . 1		
177	8.22	787	2.64	20127	8 . 0		
158	9.19	881	2.46	20381	9 . 0		
142	10.27	987	2.27	19486	1 0 .		
124	11.71	1124	2.08	19966	1 1 .		
114	12.74	1222	1.98	20166	1 2 .		
100	14.53	1395	1.81	19933	1 4 .		
88	16.59	1592	1.65	20102	1 6 .		
79	18.43	1761	1.5	19528	1 8 .		
71	20.59	1967	1.44	19926	2 0 .		
64	22.87	2192	1.3	19580	2 2 .		
56	26.04	2482	1.06	21600	2 5 .		
51	28.74	2740	0.96	20700	2 8 .		
137	10.59	1014	3.63	29400	M 1 0 2 1 1 0 . _ M _ - _ _ 1 5 . A - -	260	160L
121	11.98	1147	3.28	30000	1 1 .		
116	12.51	1196	3.25	30200	1 2 .		
103	14.16	1351	3	30954	1 4 .		
89	16.43	1569	2.4	31354	1 6 .		
80	18.25	1744	2.16	31312	1 8 .		
75	19.41	1851	2.38	31628	2 0 .		
67	21.57	2060	2.14	30688	2 2 .		
56	26.03	2482	1.52	34179	2 5 .		
49	29.99	2860	1.32	35232	2 8 .		
47	30.76	2929	1.51	35762	3 2 .		
41	35.44	3380	1.3	35456	3 6 .		
39	37.06	3533	1.18	37527	4 0 .		
34	42.7	4064	1.02	38700	4 5 .		
30	47.93	4538	0.92	39500	5 0 .		
81	18	1719	3.61	55200	M 1 3 2 1 1 8 . _ M _ - _ _ 1 5 . A - -	321	160L
73	20	1902	3.34	56100	2 0 .		
65	22.55	2142	2.96	56772	2 2 .		
57	25.45	2419	2.56	58681	2 5 .		
51	28.35	2694	2.3	60368	2 8 .		
46	31.89	3023	2.1	61752	3 2 .		
41	35.52	3354	1.89	63733	3 6 .		
37	39.01	3685	1.75	63433	4 0 .		
33	43.45	4091	1.58	65200	4 5 .		
36	39.93	3774	1.47	49920	M 1 3 3 1 4 0 . _ M _ - _ _ 1 5 . A - -	343	160L
33	44.18	4154	1.49	49920	4 5 .		
29	50.02	4692	1.34	49920	5 0 .		
26	56.93	5348	1.16	66554	5 6 .		
23	64.17	6057	1.02	66520	6 3 .		
20	71.32	6684	0.95	66300	7 1 .		
18	80.39	7533	0.84	66200	8 0 .		
52	28.25	2680	3.72	79400	M 1 4 2 1 2 8 . _ M _ - _ _ 1 5 . A - -	429	160L
42	34.51	3277	3.26	80900	3 2 .		
39	37.39	3540	3.05	80900	3 6 .		
37	39.42	3724	2.67	80827	4 0 .		
34	42.71	4029	2.48	80900	4 5 .		
35	41.36	3882	2.51	66304	M 1 4 3 1 4 0 . _ M _ - _ _ 1 5 . A - -	474	160L
30	48.21	4517	2.44	66304	4 5 .		
27	54.75	5122	2.15	66304	5 0 .		
24	59.46	5585	1.88	66133	5 6 .		
22	65.55	6151	1.74	66133	6 3 .		
18	78.7	7373	1.49	65986	7 1 .		
17	86.76	8100	1.36	80900	8 0 .		
15	94.35	8825	1.26	80900	9 0 .		
14	102.23	9591	1.16	80900	1 0 0		
12	124.89	11661	0.94	80900	1 1 2		
11	135.31	12648	0.87	80900	1 2 5		

NOTE

Other output speeds are available using 2 and 8 pole motors - Consult Textron Power Transmission

0205

15.0 kW

6 POLE

N2 R/MIN Output Speed	i Ratio	M2 Nm Output Torque	Fm Service Factor	N Overhung Load	Unit Designation Column Entry 1 Through 20 Spaces to be filled when entering order	Kg Weight of base mount unit	Motor Size
656	1.48	213	3.49	15400	M 0 9 2 1 1 . 4 _ M _ - _ _ 1 5 . C - -	313	D180L
476	2.04	295	3.49	17100	1 . 8		
425	2.28	331	3.29	17700	2 . 2		
379	2.56	371	2.93	18200	2 . 5		
327	2.97	427	3.49	18600	2 . 8		
294	3.3	478	2.28	18700	3 . 2		
263	3.69	535	2.03	18884	3 . 6		
237	4.09	587	3.08	19305	4 . 0		
212	4.58	662	2.87	19663	4 . 5		
191	5.07	731	2.71	20042	5 . 0		
171	5.69	817	2.52	20400	5 . 6		
146	6.63	953	2.28	20336	6 . 3		
131	7.4	1065	2.12	20033	7 . 1		
118	8.22	1183	1.99	20233	8 . 0		
106	9.19	1322	1.85	20033	9 . 0		
94	10.27	1478	1.71	19166	1 0 .		
83	11.71	1682	1.57	18045	1 1 .		
76	12.74	1832	1.5	18329	1 2 .		
67	14.53	2091	1.37	17921	1 4 .		
58	16.59	2389	1.1	17688	1 6 .		
53	18.43	2648	1	16802	1 8 .		
47	20.59	2969	0.96	17028	2 0 .		
42	22.87	3291	0.87	15725	2 2 .		
443	2.19	315	3.49	23700	M 1 0 2 1 2 . 2 _ M _ - _ _ 1 5 . C - -	359	D180L
390	2.49	358	3.49	24700	2 . 5		
324	2.99	429	3.49	26000	2 . 8		
299	3.24	468	3.35	26100	3 . 2		
277	3.5	505	3.11	26300	3 . 6		
232	4.18	598	3.49	27100	4 . 0		
213	4.55	653	3.49	27300	4 . 5		
196	4.94	707	3.49	27700	5 . 0		
181	5.37	770	3.49	28100	5 . 6		
144	6.72	965	3.49	29200	6 . 3		
134	7.26	1043	3.49	29500	7 . 1		
122	7.95	1139	3.3	30000	8 . 0		
113	8.58	1230	3.15	30400	9 . 0		
92	10.59	1520	2.48	31305	1 0 .		
81	11.98	1722	2.19	31821	1 1 .		
78	12.51	1794	2.45	32100	1 2 .		
68	14.16	2033	2.17	32315	1 4 .		
59	16.43	2361	1.6	31900	1 6 .		
53	18.25	2615	1.44	31966	1 8 .		
50	19.41	2785	1.58	32500	2 0 .		
45	21.57	3088	1.43	32366	2 2 .		
37	26.03	3731	1.01	34434	2 5 .		
32	29.99	4305	0.88	32566	2 8 .		
32	30.76	4393	1	33272	3 2 .		
27	35.44	5075	0.87	31505	3 6 .		
78	12.39	1771	3.58	55600	M 1 3 2 1 1 2 . _ M _ - _ _ 1 5 . C - -	419	D180L
69	14.03	2008	3.13	56600	1 4 .		
61	15.97	2289	2.71	58200	1 6 .		
54	18	2578	2.4	59209	1 8 .		
48	20	2856	2.22	60900	2 0 .		
43	22.55	3217	1.97	62554	2 2 .		
38	25.45	3623	1.71	62540	2 5 .		
34	28.35	4036	1.54	62835	2 8 .		
30	31.89	4532	1.4	62684	3 2 .		
27	35.52	5041	1.26	63248	3 6 .		
25	39.01	5511	1.17	62008	4 0 .		
22	43.45	6147	1.05	65390	4 5 .		
24	39.93	5652	1.05	66700	M 1 3 3 1 4 0 . _ M _ - _ _ 1 5 . C - -	441	D180L
22	44.18	6242	1.02	66600	4 5 .		
19	50.02	7034	0.9	66500	5 0 .		
40	23.97	3425	3.15	80900	M 1 4 2 1 2 2 . _ M _ - _ _ 1 5 . C - -	529	D180L
37	26.07	3728	2.84	80900	2 5 .		
34	28.25	4025	2.48	79745	2 8 .		
28	34.51	4917	2.18	79109	3 2 .		
26	37.39	5308	2.03	78890	3 6 .		
25	39.42	5573	1.81	80800	4 0 .		
23	42.71	6045	1.67	80823	4 5 .		
23	41.36	5860	1.79	65833	M 1 4 3 1 4 0 . _ M _ - _ _ 1 5 . C - -	574	D180L
20	48.21	6775	1.62	65833	4 5 .		
18	54.75	7702	1.43	65833	5 0 .		
16	59.46	8364	1.33	80900	5 6 .		
15	65.55	9257	1.2	80900	6 3 .		
12	78.7	11033	1	80900	7 1 .		
11	86.76	12186	0.9	80900	8 0 .		
10	94.35	13288	0.84	80900	9 0 .		

NOTE

Other output speeds are available using 2 and 8 pole motors - Consult Textron Power Transmission

0205

18.5 kW

4 POLE

N2 R/MIN	i	M2 Nm	Fm	N	Unit Designation	Kg	
Output Speed	Ratio	Output Torque	Service Factor	Overhung Load	Column Entry 1 Through 20 Spaces to be filled when entering order	Weight of base mount unit	Motor Size
574	2.56	299	3.6	16006	M 0 9 2 1 2 . 5 _ M _ - _ _ 1 8 . A - -	299	D180M
445	3.3	390	2.79	17283	3 . 2		
399	3.69	435	2.5	17871	3 . 6		
360	4.09	477	3.35	18271	4 . 0		
321	4.58	537	3.12	18560	4 . 5		
290	5.07	594	2.94	18760	5 . 0		
259	5.69	664	2.74	19025	5 . 6		
222	6.63	776	2.47	19255	6 . 3		
199	7.4	866	2.31	19390	7 . 1		
179	8.22	960	2.16	19692	8 . 0		
160	9.19	1076	2.02	19777	9 . 0		
143	10.27	1205	1.86	18406	1 0 .		
126	11.71	1373	1.7	18877	1 1 .		
115	12.74	1491	1.62	19031	1 2 .		
101	14.53	1703	1.49	18408	1 4 .		
89	16.59	1943	1.35	18651	1 6 .		
80	18.43	2150	1.23	17714	1 8 .		
71	20.59	2401	1.18	17963	2 0 .		
64	22.87	2676	1.07	17190	2 2 .		
202	7.26	847	3.8	27300	M 1 0 2 1 7 . 1 _ M _ - _ _ 1 8 . A - -	345	D180M
185	7.95	927	3.59	27700	8 . 0		
171	8.58	1000	3.42	28166	9 . 0		
139	10.59	1238	2.97	29096	1 0 .		
123	11.98	1401	2.69	29661	1 1 .		
118	12.51	1460	2.66	29861	1 2 .		
104	14.16	1649	2.46	30551	1 4 .		
89	16.43	1916	1.97	30601	1 6 .		
81	18.25	2129	1.77	29926	1 8 .		
76	19.41	2260	1.95	30144	2 0 .		
68	21.57	2514	1.75	28955	2 2 .		
56	26.03	3030	1.24	33189	2 5 .		
49	29.99	3492	1.08	34016	2 8 .		
48	30.76	3576	1.23	34631	3 2 .		
41	35.44	4126	1.07	33578	3 6 .		
40	37.06	4313	0.96	36200	4 0 .		
105	14.03	1632	3.85	52700	M 1 3 2 1 1 4 . _ M _ - _ _ 1 8 . A - -	405	D180M
92	15.97	1860	3.33	53508	1 6 .		
82	18	2099	2.95	54351	1 8 .		
73	20	2322	2.73	55137	2 0 .		
65	22.55	2615	2.43	55689	2 2 .		
58	25.45	2954	2.1	57493	2 5 .		
52	28.35	3288	1.89	59164	2 8 .		
46	31.89	3690	1.72	60423	3 2 .		
41	35.52	4094	1.55	62442	3 6 .		
38	39.01	4499	1.44	61862	4 0 .		
34	43.45	4995	1.29	64500	4 5 .		
37	39.93	4607	1.2	49360	M 1 3 3 1 4 0 . _ M _ - _ _ 1 8 . A - -	427	D180M
33	44.18	5071	1.22	49360	4 5 .		
29	50.02	5728	1.1	49360	5 0 .		
26	56.93	6529	0.95	66500	5 6 .		
23	64.17	7394	0.84	66400	6 3 .		
61	23.97	2787	3.87	75200	M 1 4 2 1 2 2 . _ M _ - _ _ 1 8 . A - -	515	D180M
56	26.07	3003	3.5	77000	2 5 .		
52	28.25	3272	3.05	78603	2 8 .		
43	34.51	4001	2.67	79736	3 2 .		
39	37.39	4321	2.5	79675	3 6 .		
37	39.42	4546	2.19	80742	4 0 .		
34	42.71	4918	2.03	80900	4 5 .		
36	41.36	4739	2.05	66192	M 1 4 3 1 4 0 . _ M _ - _ _ 1 8 . A - -	560	D180M
30	48.21	5514	1.99	66192	4 5 .		
27	54.75	6253	1.76	66192	5 0 .		
25	59.46	6818	1.54	66008	5 6 .		
22	65.55	7509	1.42	66008	6 3 .		
19	78.7	9001	1.22	65793	7 1 .		
17	86.76	9888	1.11	80900	8 0 .		
16	94.35	10774	1.03	80900	9 0 .		
14	102.23	11708	0.95	80900	1 0 0		

NOTE

Other output speeds are available using 2 and 8 pole motors - Consult Textron Power Transmission

18.5 kW

6 POLE

N2 R/MIN	i	M2 Nm	Fm	N	Unit Designation	Kg	
Output Speed	Ratio	Output Torque	Service Factor	Overhung Load	Column Entry 1 Through 20 Spaces to be filled when entering order	Weight of base mount unit	Motor Size
659	1.48	261	2.84	15306	M 0 9 2 1 1 . 4 _ M _ - _ _ 1 8 . C - -	368	D200L
479	2.04	362	2.84	16936	1 . 8		
427	2.28	406	2.68	17513	2 . 2		
381	2.56	456	2.39	18013	2 . 5		
328	2.97	523	2.84	18413	2 . 8		
295	3.3	587	1.86	18443	3 . 2		
264	3.69	657	1.66	18607	3 . 6		
239	4.09	721	2.51	19047	4 . 0		
213	4.58	812	2.34	19368	4 . 5		
192	5.07	897	2.21	19728	5 . 0		
171	5.69	1003	2.05	20050	5 . 6		
147	6.63	1169	1.86	19581	6 . 3		
132	7.4	1306	1.73	19068	7 . 1		
119	8.22	1452	1.62	19175	8 . 0		
106	9.19	1622	1.51	18648	9 . 0		
95	10.27	1814	1.39	17237	1 0 .		
83	11.71	2063	1.28	15741	1 1 .		
77	12.74	2248	1.22	15982	1 2 .		
67	14.53	2566	1.11	15055	1 4 .		
59	16.59	2932	0.9	14694	1 6 .		
53	18.43	3249	0.81	13271	1 8 .		
676	1.44	253	2.84	20700	M 1 0 2 1 1 . 4 _ M _ - _ _ 1 8 . C - -	414	D200L
484	2.01	355	2.84	23000	1 . 8		
445	2.19	386	2.84	23560	2 . 2		
392	2.49	439	2.84	24536	2 . 5		
326	2.99	527	2.84	25813	2 . 8		
301	3.24	574	2.73	25866	3 . 2		
279	3.5	620	2.53	26066	3 . 6		
233	4.18	734	2.84	26843	4 . 0		
215	4.55	801	2.84	27043	4 . 5		
197	4.94	868	2.84	27420	5 . 0		
182	5.37	945	2.84	27796	5 . 6		
145	6.72	1185	2.84	28803	6 . 3		
134	7.26	1280	2.84	29080	7 . 1		
123	7.95	1397	2.69	29556	8 . 0		
114	8.58	1509	2.56	29910	9 . 0		
92	10.59	1866	2.02	30697	1 0 .		
81	11.98	2112	1.78	31139	1 1 .		
78	12.51	2201	2	31400	1 2 .		
69	14.16	2494	1.77	31192	1 4 .		
59	16.43	2897	1.3	30080	1 6 .		
53	18.25	3208	1.17	29664	1 8 .		
50	19.41	3418	1.29	30073	2 0 .		
45	21.57	3789	1.16	29364	2 2 .		
37	26.03	4578	0.82	31417	2 5 .		
32	30.76	5391	0.82	29636	3 2 .		
336	2.9	510	3.41	44500	M 1 3 2 1 2 . 8 _ M _ - _ _ 1 8 . C - -	475	D200L
306	3.19	560	3.41	45000	3 . 2		
268	3.64	639	3.41	45700	3 . 6		
242	4.03	709	3.41	46300	4 . 0		
221	4.42	780	3.41	46800	4 . 5		
193	5.04	885	3.41	47600	5 . 0		
176	5.54	973	3.41	48400	5 . 6		
157	6.21	1094	3.41	49300	6 . 3		
142	6.88	1214	3.41	50100	7 . 1		
125	7.78	1366	3.41	51200	8 . 0		
113	8.62	1513	3.41	52000	9 . 0		
99	9.89	1742	3.41	53100	1 0 .		
87	11.2	1978	3	54200	1 1 .		
79	12.39	2174	2.92	54733	1 2 .		
69	14.03	2463	2.55	55550	1 4 .		
61	15.97	2809	2.21	56896	1 6 .		
54	18	3163	1.96	57729	1 8 .		
49	20	3505	1.81	59237	2 0 .		
43	22.55	3947	1.61	60589	2 2 .		
38	25.45	4446	1.39	60552	2 5 .		
34	28.35	4953	1.25	61032	2 8 .		
31	31.89	5560	1.14	60857	3 2 .		
27	35.52	6185	1.03	61977	3 6 .		
25	39.01	6762	0.96	60279	4 0 .		
22	43.45	7543	0.86	64945	4 5 .		
24	39.93	6935	0.86	66700	M 1 3 3 1 4 0 . _ M _ - _ _ 1 8 . C - -	497	D200L
22	44.18	7660	0.83	66600	4 5 .		
54	18.11	3174	3.5	78000	M 1 4 2 1 1 8 . _ M _ - _ _ 1 8 . C - -	586	D200L
45	21.75	3808	2.78	80900	2 0 .		
41	23.97	4203	2.57	79692	2 2 .		
37	26.07	4575	2.32	79867	2 5 .		
35	28.25	4939	2.02	78735	2 8 .		
28	34.51	6034	1.77	77542	3 2 .		
26	37.39	6514	1.66	77132	3 6 .		
25	39.42	6839	1.48	80753	4 0 .		
23	42.71	7418	1.36	80788	4 5 .		
24	41.36	7190	1.46	65568	M 1 4 3 1 4 0 . _ M _ - _ _ 1 8 . C - -	631	D200L
20	48.21	8314	1.32	65568	4 5 .		
18	54.75	9451	1.16	65568	5 0 .		
16	59.46	10263	1.08	80900	5 6 .		
15	65.55	11359	0.98	80900	6 3 .		
12	78.7	13538	0.81	80900	7 1 .		

NOTE

Other output speeds are available using 2 and 8 pole motors - Consult Textron Power Transmission

0205

22.0 kW

4 POLE

N2 R/MIN	i	M2 Nm	Fm	N	Unit Designation	Kg	
Output Speed	Ratio	Output Torque	Service Factor	Overhung Load	Column Entry 1 Through 20 Spaces to be filled when entering order	Weight of base mount unit	Motor Size
994	1.48	206	3.6	13447	M 0 9 2 1 1 . 4 _ M _ - _ _ 2 2 . A - -	313	D180L
722	2.04	284	3.5	14860	1 . 8		
644	2.28	318	3.39	15413	2 . 2		
574	2.56	356	3.03	15913	2 . 5		
495	2.97	412	3.4	16813	2 . 8		
445	3.3	463	2.35	17166	3 . 2		
399	3.69	517	2.11	17743	3 . 6		
360	4.09	568	2.82	18143	4 . 0		
321	4.58	639	2.63	18420	4 . 5		
290	5.07	707	2.47	18620	5 . 0		
259	5.69	789	2.3	18850	5 . 6		
222	6.63	923	2.08	19010	6 . 3		
199	7.4	1030	1.94	19009	7 . 1		
179	8.22	1142	1.82	19257	8 . 0		
160	9.19	1279	1.7	19172	9 . 0		
143	10.27	1433	1.56	17327	1 0 .		
126	11.71	1632	1.43	17788	1 1 .		
115	12.74	1774	1.36	17895	1 2 .		
101	14.53	2025	1.25	16884	1 4 .		
89	16.59	2311	1.13	17200	1 6 .		
80	18.43	2557	1.03	15899	1 8 .		
71	20.59	2856	0.99	15999	2 0 .		
64	22.87	3182	0.9	14800	2 2 .		
1019	1.44	200	3.6	18100	M 1 0 2 1 1 . 4 _ M _ - _ _ 2 2 . A - -	359	D180L
730	2.01	280	3.6	20100	1 . 8		
671	2.19	305	3.6	20600	2 . 2		
591	2.49	346	3.6	21400	2 . 5		
491	2.99	413	3.6	22800	2 . 8		
453	3.24	451	3.39	23300	3 . 2		
420	3.5	488	3.19	23800	3 . 6		
352	4.18	579	3.6	25300	4 . 0		
323	4.55	632	3.6	25600	4 . 5		
298	4.94	685	3.6	25900	5 . 0		
274	5.37	746	3.6	26200	5 . 6		
219	6.72	934	3.36	26800	6 . 3		
202	7.26	1008	3.19	27101	7 . 1		
185	7.95	1103	3.02	27501	8 . 0		
171	8.58	1189	2.88	27933	9 . 0		
139	10.59	1473	2.5	28793	1 0 .		
123	11.98	1666	2.26	29323	1 1 .		
118	12.51	1736	2.24	29523	1 2 .		
104	14.16	1961	2.06	30148	1 4 .		
89	16.43	2278	1.65	29848	1 6 .		
81	18.25	2532	1.49	28540	1 8 .		
76	19.41	2688	1.64	28660	2 0 .		
68	21.57	2990	1.47	27223	2 2 .		
56	26.03	3604	1.05	32200	2 5 .		
49	29.99	4152	0.91	32800	2 8 .		
48	30.76	4253	1.04	33500	3 2 .		
41	35.44	4907	0.9	31700	3 6 .		
131	11.2	1558	3.81	50400	M 1 3 2 1 1 1 . _ M _ - _ _ 2 2 . A - -	419	D180L
119	12.39	1716	3.7	51300	1 2 .		
105	14.03	1941	3.24	52018	1 4 .		
92	15.97	2212	2.8	52817	1 6 .		
82	18	2496	2.48	53502	1 8 .		
73	20	2761	2.3	54175	2 0 .		
65	22.55	3110	2.04	54606	2 2 .		
58	25.45	3512	1.76	56306	2 5 .		
52	28.35	3911	1.59	57960	2 8 .		
46	31.89	4388	1.45	59094	3 2 .		
41	35.52	4869	1.3	61151	3 6 .		
38	39.01	5350	1.21	60291	4 0 .		
34	43.45	5940	1.09	63800	4 5 .		
37	39.93	5479	1.01	48800	M 1 3 3 1 4 0 . _ M _ - _ _ 2 2 . A - -	441	D180L
33	44.18	6031	1.02	48800	4 5 .		
29	50.02	6812	0.93	48800	5 0 .		
68	21.75	2999	3.53	73600	M 1 4 2 1 2 0 . _ M _ - _ _ 2 2 . A - -	529	D180L
61	23.97	3314	3.26	74382	2 2 .		
56	26.07	3571	2.94	75965	2 5 .		
52	28.25	3891	2.56	77807	2 8 .		
43	34.51	4758	2.25	78572	3 2 .		
39	37.39	5139	2.1	78450	3 6 .		
37	39.42	5406	1.84	80657	4 0 .		
34	42.71	5849	1.71	80900	4 5 .		
36	41.36	5636	1.73	66080	M 1 4 3 1 4 0 . _ M _ - _ _ 2 2 . A - -	574	D180L
30	48.21	6557	1.68	66080	4 5 .		
27	54.75	7436	1.48	66080	5 0 .		
25	59.46	8108	1.29	65884	5 6 .		
22	65.55	8930	1.2	65884	6 3 .		
19	78.7	10704	1.03	65600	7 1 .		
17	86.76	11758	0.94	80900	8 0 .		
16	94.35	12812	0.87	80900	9 0 .		

NOTE

Other output speeds are available using 2 and 8 pole motors - Consult Textron Power Transmission

22.0 kW

6 POLE

N2 R/MIN Output Speed	i Ratio	M2 Nm Output Torque	Fm Service Factor	N Overhung Load	Unit Designation Column Entry 1 Through 20 Spaces to be filled when entering order	Kg Weight of base mount unit	Motor Size
659	1.48	311	2.39	15213	M 0 9 2 1 1 . 4 _ M _ - _ _ 2 2 . C - -	368	D200L
479	2.04	430	2.39	16773	1 . 8		
427	2.28	483	2.25	17326	2 . 2		
381	2.56	542	2.01	17826	2 . 5		
328	2.97	623	2.39	18226	2 . 8		
295	3.3	698	1.56	18186	3 . 2		
264	3.69	781	1.39	18331	3 . 6		
239	4.09	857	2.11	18789	4 . 0		
213	4.58	966	1.97	19073	4 . 5		
192	5.07	1066	1.86	19415	5 . 0		
171	5.69	1193	1.73	19700	5 . 6		
147	6.63	1390	1.56	18826	6 . 3		
132	7.4	1554	1.45	18104	7 . 1		
119	8.22	1727	1.37	18117	8 . 0		
106	9.19	1929	1.27	17264	9 . 0		
95	10.27	2157	1.17	15308	1 0 .		
83	11.71	2454	1.08	13436	1 1 .		
77	12.74	2673	1.02	13634	1 2 .		
67	14.53	3051	0.94	12190	1 4 .		
676	1.44	301	2.39	20578	M 1 0 2 1 1 . 4 _ M _ - _ _ 2 2 . C - -	414	D200L
484	2.01	422	2.39	22847	1 . 8		
445	2.19	459	2.39	23420	2 . 2		
392	2.49	522	2.39	24373	2 . 5		
326	2.99	627	2.39	25626	2 . 8		
301	3.24	682	2.3	25633	3 . 2		
279	3.5	737	2.13	25833	3 . 6		
233	4.18	873	2.39	26586	4 . 0		
215	4.55	953	2.39	26786	4 . 5		
197	4.94	1032	2.39	27140	5 . 0		
182	5.37	1124	2.39	27493	5 . 6		
145	6.72	1409	2.39	28406	6 . 3		
134	7.26	1522	2.39	28660	7 . 1		
123	7.95	1662	2.26	29113	8 . 0		
114	8.58	1795	2.16	29420	9 . 0		
92	10.59	2219	1.7	30089	1 0 .		
81	11.98	2512	1.5	30457	1 1 .		
78	12.51	2618	1.68	30700	1 2 .		
69	14.16	2966	1.49	30068	1 4 .		
59	16.43	3445	1.09	28260	1 6 .		
53	18.25	3816	0.99	27362	1 8 .		
50	19.41	4064	1.08	27646	2 0 .		
45	21.57	4506	0.98	26362	2 2 .		
336	2.9	606	2.87	44375	M 1 3 2 1 2 . 8 _ M _ - _ _ 2 2 . C - -	475	D200L
306	3.19	666	2.87	44865	3 . 2		
268	3.64	760	2.87	45546	3 . 6		
242	4.03	844	2.87	46127	4 . 0		
221	4.42	927	2.87	46617	4 . 5		
193	5.04	1053	2.87	47389	5 . 0		
176	5.54	1158	2.87	48169	5 . 6		
157	6.21	1301	2.87	49031	6 . 3		
142	6.88	1444	2.87	49812	7 . 1		
125	7.78	1625	2.87	50854	8 . 0		
113	8.62	1799	2.87	51558	9 . 0		
99	9.89	2071	2.87	52476	1 0 .		
87	11.2	2352	2.53	53404	1 1 .		
79	12.39	2585	2.46	53867	1 2 .		
69	14.03	2930	2.15	54500	1 4 .		
61	15.97	3340	1.86	55592	1 6 .		
54	18	3761	1.65	56250	1 8 .		
49	20	4168	1.52	57575	2 0 .		
43	22.55	4694	1.35	58625	2 2 .		
38	25.45	5287	1.17	58564	2 5 .		
34	28.35	5890	1.05	59228	2 8 .		
31	31.89	6613	0.96	59030	3 2 .		
27	35.52	7355	0.86	60706	3 6 .		
25	39.01	8042	0.8	58551	4 0 .		
64	15.13	3159	3.29	74100	M 1 4 2 1 1 4 . _ M _ - _ _ 2 2 . C - -	586	D200L
59	16.43	3425	3.24	75400	1 6 .		
54	18.11	3774	2.94	77252	1 8 .		
45	21.75	4528	2.34	79634	2 0 .		
41	23.97	4998	2.16	78485	2 2 .		
37	26.07	5441	1.95	78835	2 5 .		
35	28.25	5874	1.7	77725	2 8 .		
28	34.51	7175	1.49	75975	3 2 .		
26	37.39	7746	1.39	75375	3 6 .		
25	39.42	8133	1.24	80706	4 0 .		
23	42.71	8821	1.14	80752	4 5 .		
24	41.36	8550	1.23	65304	M 1 4 3 1 4 0 . _ M _ - _ _ 2 2 . C - -	631	D200L
20	48.21	9887	1.11	65304	4 5 .		
18	54.75	11239	0.98	65304	5 0 .		
16	59.46	12205	0.91	80900	5 6 .		
15	65.55	13508	0.82	80900	6 3 .		

NOTE

Other output speeds are available using 2 and 8 pole motors - Consult Textron Power Transmission

0205

30.0 kW

4 POLE

N2 R/MIN	i	M2 Nm	Fm	N	Unit Designation	Kg	
Output Speed	Ratio	Output Torque	Service Factor	Overhung Load	Column Entry 1 Through 20 Spaces to be filled when entering order	Weight of base mount unit	Motor Size
994	1.48	281	2.64	13326	M 0 9 2 1 1 . 4 _ M _ - _ _ 3 0 . A - -	368	D200L
722	2.04	387	2.56	14700	1 . 8		
644	2.28	434	2.48	15200	2 . 2		
574	2.56	486	2.22	15700	2 . 5		
495	2.97	562	2.49	16600	2 . 8		
445	3.3	632	1.72	16900	3 . 2		
399	3.69	705	1.54	17450	3 . 6		
360	4.09	774	2.06	17850	4 . 0		
321	4.58	872	1.93	18100	4 . 5		
290	5.07	964	1.81	18300	5 . 0		
259	5.69	1077	1.69	18450	5 . 6		
222	6.63	1259	1.52	18450	6 . 3		
199	7.4	1405	1.42	18136	7 . 1		
179	8.22	1558	1.33	18263	8 . 0		
160	9.19	1744	1.24	17790	9 . 0		
143	10.27	1955	1.15	14859	1 0 .		
126	11.71	2226	1.05	15300	1 1 .		
115	12.74	2419	1	15300	1 2 .		
101	14.53	2762	0.92	13400	1 4 .		
1019	1.44	273	2.64	17995	M 1 0 2 1 1 . 4 _ M _ - _ _ 3 0 . A - -	414	D200L
730	2.01	382	2.64	19960	1 . 8		
671	2.19	416	2.64	20460	2 . 2		
591	2.49	473	2.64	21260	2 . 5		
491	2.99	563	2.64	22626	2 . 8		
453	3.24	615	2.49	23056	3 . 2		
420	3.5	666	2.34	23556	3 . 6		
352	4.18	790	2.64	25056	4 . 0		
323	4.55	862	2.64	25356	4 . 5		
298	4.94	934	2.64	25621	5 . 0		
274	5.37	1017	2.64	25886	5 . 6		
219	6.72	1274	2.46	26417	6 . 3		
202	7.26	1374	2.34	26649	7 . 1		
185	7.95	1504	2.21	27049	8 . 0		
171	8.58	1621	2.11	27400	9 . 0		
139	10.59	2009	1.83	28100	1 0 .		
123	11.98	2272	1.66	28550	1 1 .		
118	12.51	2368	1.64	28750	1 2 .		
104	14.16	2675	1.51	29227	1 4 .		
89	16.43	3107	1.21	28127	1 6 .		
81	18.25	3453	1.09	25372	1 8 .		
76	19.41	3665	1.2	25268	2 0 .		
68	21.57	4078	1.08	23264	2 2 .		
506	2.9	548	3.17	39200	M 1 3 2 1 2 . 8 _ M _ - _ _ 3 0 . A - -	475	D200L
461	3.19	602	3.17	40200	3 . 2		
404	3.64	684	3.17	41800	3 . 6		
365	4.03	763	3.17	43000	4 . 0		
333	4.42	839	3.17	44100	4 . 5		
292	5.04	952	3.17	44800	5 . 0		
265	5.54	1047	3.17	45300	5 . 6		
237	6.21	1176	3.17	45800	6 . 3		
214	6.88	1302	3.17	46300	7 . 1		
189	7.78	1470	3.17	47100	8 . 0		
171	8.62	1627	3.17	47800	9 . 0		
149	9.89	1873	3.17	48800	1 0 .		
131	11.2	2125	2.79	49517	1 1 .		
119	12.39	2340	2.71	50288	1 2 .		
105	14.03	2647	2.38	50461	1 4 .		
92	15.97	3017	2.05	51237	1 6 .		
82	18	3403	1.82	51562	1 8 .		
73	20	3765	1.69	51975	2 0 .		
65	22.55	4241	1.5	52132	2 2 .		
58	25.45	4790	1.29	53590	2 5 .		
52	28.35	5333	1.16	55208	2 8 .		
46	31.89	5984	1.06	56057	3 2 .		
41	35.52	6639	0.96	58200	3 6 .		
38	39.01	7296	0.89	56700	4 0 .		
97	15.13	2849	3.65	68600	M 1 4 2 1 1 4 . _ M _ - _ _ 3 0 . A - -	586	D200L
89	16.43	3096	3.21	69600	1 6 .		
81	18.11	3428	3	70600	1 8 .		
68	21.75	4089	2.59	71941	2 0 .		
61	23.97	4520	2.39	72513	2 2 .		
56	26.07	4870	2.16	73600	2 5 .		
52	28.25	5306	1.88	75987	2 8 .		
43	34.51	6488	1.65	75912	3 2 .		
39	37.39	7008	1.54	75650	3 6 .		
37	39.42	7372	1.35	80463	4 0 .		
34	42.71	7976	1.25	80900	4 5 .		
36	41.36	7685	1.27	65824	M 1 4 3 1 4 0 . _ M _ - _ _ 3 0 . A - -	631	D200L
30	48.21	8942	1.23	65824	4 5 .		
27	54.75	10140	1.08	65824	5 0 .		
25	59.46	11057	0.95	65600	5 6 .		
22	65.55	12178	0.88	65600	6 3 .		

NOTE

Other output speeds are available using 2 and 8 pole motors - Consult Textron Power Transmission

0205

30.0 kW

6 POLE

N2 R/MIN Output Speed	i Ratio	M2 Nm Output Torque	Fm Service Factor	N Overhung Load	Unit Designation Column Entry 1 Through 20 Spaces to be filled when entering order	Kg Weight of base mount unit	Motor Size
663	1.48	422	1.76	15000	M 0 9 2 1 1 . 4 _ M _ - _ _ 3 0 . C - -	462	D225M
481	2.04	584	1.76	16400	1 . 8		
429	2.28	656	1.66	16900	2 . 2		
383	2.56	736	1.48	17400	2 . 5		
330	2.97	845	1.76	17800	2 . 8		
297	3.3	947	1.15	17600	3 . 2		
266	3.69	1060	1.03	17700	3 . 6		
240	4.09	1163	1.56	18200	4 . 0		
214	4.58	1310	1.45	18400	4 . 5		
193	5.07	1447	1.37	18700	5 . 0		
172	5.69	1618	1.27	18900	5 . 6		
148	6.63	1886	1.15	17100	6 . 3		
132	7.4	2108	1.07	15900	7 . 1		
119	8.22	2343	1.01	15700	8 . 0		
107	9.19	2618	0.94	14100	9 . 0		
95	10.27	2927	0.86	10900	1 0 .		
679	1.44	409	1.76	20300	M 1 0 2 1 1 . 4 _ M _ - _ _ 3 0 . C - -	508	D225M
486	2.01	573	1.76	22500	1 . 8		
447	2.19	624	1.76	23100	2 . 2		
394	2.49	709	1.76	24000	2 . 5		
328	2.99	850	1.76	25200	2 . 8		
302	3.24	926	1.69	25100	3 . 2		
280	3.5	1000	1.57	25300	3 . 6		
234	4.18	1185	1.76	26000	4 . 0		
216	4.55	1293	1.76	26200	4 . 5		
198	4.94	1401	1.76	26500	5 . 0		
182	5.37	1526	1.76	26800	5 . 6		
146	6.72	1911	1.76	27500	6 . 3		
135	7.26	2065	1.76	27700	7 . 1		
123	7.95	2255	1.67	28100	8 . 0		
114	8.58	2435	1.59	28300	9 . 0		
93	10.59	3010	1.25	28700	1 0 .		
82	11.98	3408	1.11	28900	1 1 .		
78	12.51	3552	1.24	29100	1 2 .		
69	14.16	4024	1.1	27500	1 4 .		
60	16.43	4674	0.81	24100	1 6 .		
337	2.9	823	2.11	44090	M 1 3 2 1 2 . 8 _ M _ - _ _ 3 0 . C - -	569	D225M
307	3.19	903	2.11	44558	3 . 2		
269	3.64	1031	2.11	45195	3 . 6		
243	4.03	1145	2.11	45732	4 . 0		
222	4.42	1258	2.11	46201	4 . 5		
194	5.04	1429	2.11	46906	5 . 0		
177	5.54	1571	2.11	47643	5 . 6		
158	6.21	1765	2.11	48417	6 . 3		
142	6.88	1959	2.11	49154	7 . 1		
126	7.78	2205	2.11	50065	8 . 0		
114	8.62	2441	2.11	50550	9 . 0		
99	9.89	2811	2.11	51052	1 0 .		
88	11.2	3191	1.86	51584	1 1 .		
79	12.39	3507	1.81	51887	1 2 .		
70	14.03	3975	1.58	52100	1 4 .		
61	15.97	4532	1.37	52612	1 6 .		
54	18	5103	1.21	52868	1 8 .		
49	20	5654	1.12	53775	2 0 .		
43	22.55	6369	1	54134	2 2 .		
39	25.45	7173	0.86	54020	2 5 .		
339	2.89	817	3.08	56900	M 1 4 2 1 2 . 8 _ M _ - _ _ 3 0 . C - -	681	D225M
302	3.25	921	3.08	58400	3 . 2		
256	3.82	1080	3.08	59600	3 . 6		
243	4.03	1145	3.08	60000	4 . 0		
216	4.54	1287	3.08	60800	4 . 5		
184	5.33	1511	3.08	62000	5 . 0		
163	6	1699	3.08	63200	5 . 6		
150	6.55	1858	3.08	64200	6 . 3		
135	7.27	2062	3.08	65300	7 . 1		
113	8.67	2455	3.08	67100	8 . 0		
102	9.62	2724	3.08	68200	9 . 0		
97	10.06	2857	3.08	68700	1 0 .		
86	11.43	3240	3.08	70100	1 1 .		
74	13.32	3756	2.72	71600	1 2 .		
65	15.13	4286	2.43	72621	1 4 .		
60	16.43	4646	2.39	74066	1 6 .		
54	18.11	5120	2.17	75542	1 8 .		
45	21.75	6144	1.73	76741	2 0 .		
41	23.97	6781	1.59	75725	2 2 .		
38	26.07	7381	1.44	76475	2 5 .		
35	28.25	7969	1.25	75415	2 8 .		
28	34.51	9735	1.1	72393	3 2 .		
26	37.39	10509	1.03	71356	3 6 .		
25	39.42	11034	0.92	80600	4 0 .		
23	42.71	11968	0.84	80671	4 5 .		
24	41.36	11600	0.91	64700	M 1 4 3 1 4 0 . _ M _ - _ _ 3 0 . C - -	726	D225M
20	48.21	13413	0.82	64700	4 5 .		

NOTE

Other output speeds are available using 2 and 8 pole motors - Consult Textron Power Transmission

37.0 kW

4 POLE

N2 R/MIN	i	M2 Nm	Fm	N	Unit Designation	Kg	
Output Speed	Ratio	Output Torque	Service Factor	Overhung Load	Column Entry 1 Through 20 Spaces to be filled when entering order	Weight of base mount unit	Motor Size
997	1.48	345	2.15	13220	M 0 9 2 1 1 . 4 _ M _ - _ _ 3 7 . A - -	427	D225S
724	2.04	476	2.09	14560	1 . 8		
646	2.28	534	2.02	15013	2 . 2		
576	2.56	597	1.81	15513	2 . 5		
497	2.97	690	2.03	16413	2 . 8		
447	3.3	777	1.4	16666	3 . 2		
400	3.69	867	1.26	17193	3 . 6		
361	4.09	952	1.68	17593	4 . 0		
322	4.58	1072	1.57	17820	4 . 5		
291	5.07	1185	1.48	18020	5 . 0		
259	5.69	1323	1.37	18100	5 . 6		
223	6.63	1548	1.24	17960	6 . 3		
199	7.4	1727	1.16	17372	7 . 1		
179	8.22	1915	1.09	17393	8 . 0		
161	9.19	2144	1.01	16581	9 . 0		
144	10.27	2403	0.93	12700	1 0 .		
1023	1.44	335	2.15	17904	M 1 0 2 1 1 . 4 _ M _ - _ _ 3 7 . A - -	473	D225S
732	2.01	469	2.15	19839	1 . 8		
673	2.19	511	2.15	20339	2 . 2		
593	2.49	581	2.15	21139	2 . 5		
493	2.99	693	2.15	22473	2 . 8		
455	3.24	756	2.02	22843	3 . 2		
421	3.5	818	1.91	23343	3 . 6		
353	4.18	972	2.15	24843	4 . 0		
325	4.55	1060	2.15	25143	4 . 5		
299	4.94	1148	2.15	25378	5 . 0		
275	5.37	1251	2.15	25613	5 . 6		
219	6.72	1566	2	26082	6 . 3		
203	7.26	1690	1.91	26252	7 . 1		
186	7.95	1849	1.8	26652	8 . 0		
172	8.58	1993	1.72	26933	9 . 0		
139	10.59	2469	1.49	27493	1 0 .		
123	11.98	2792	1.35	27873	1 1 .		
118	12.51	2911	1.34	28073	1 2 .		
104	14.16	3288	1.23	28421	1 4 .		
90	16.43	3819	0.99	26621	1 6 .		
81	18.25	4245	0.89	22600	1 8 .		
76	19.41	4505	0.98	22300	2 0 .		
68	21.57	5012	0.88	19800	2 2 .		
508	2.9	674	2.58	39071	M 1 3 2 1 2 . 8 _ M _ - _ _ 3 7 . A - -	534	D225S
463	3.19	740	2.58	40071	3 . 2		
405	3.64	841	2.58	41648	3 . 6		
366	4.03	938	2.58	42825	4 . 0		
334	4.42	1031	2.58	43913	4 . 5		
293	5.04	1171	2.58	44590	5 . 0		
266	5.54	1287	2.58	45066	5 . 6		
238	6.21	1446	2.58	45543	6 . 3		
214	6.88	1601	2.58	46020	7 . 1		
190	7.78	1807	2.58	46773	8 . 0		
171	8.62	2000	2.58	47368	9 . 0		
149	9.89	2303	2.58	48181	1 0 .		
132	11.2	2612	2.27	48745	1 1 .		
119	12.39	2876	2.21	49402	1 2 .		
105	14.03	3254	1.93	49098	1 4 .		
92	15.97	3709	1.67	49855	1 6 .		
82	18	4183	1.48	49865	1 8 .		
74	20	4628	1.37	50050	2 0 .		
65	22.55	5213	1.22	49967	2 2 .		
58	25.45	5888	1.05	51215	2 5 .		
52	28.35	6555	0.95	52800	2 8 .		
46	31.89	7355	0.86	53400	3 2 .		
511	2.89	669	3.77	50300	M 1 4 2 1 2 . 8 _ M _ - _ _ 3 7 . A - -	646	D225S
454	3.25	754	3.77	52100	3 . 2		
386	3.82	884	3.77	54600	3 . 6		
366	4.03	937	3.77	55400	4 . 0		
325	4.54	1054	3.77	57400	4 . 5		
277	5.33	1237	3.77	58800	5 . 0		
246	6	1391	3.77	59600	5 . 6		
225	6.55	1521	3.77	60200	6 . 3		
203	7.27	1688	3.77	60900	7 . 1		
170	8.67	2009	3.77	62400	8 . 0		
153	9.62	2230	3.77	63400	9 . 0		
147	10.06	2336	3.77	63900	1 0 .		
129	11.43	2662	3.44	65200	1 1 .		
111	13.32	3066	3.33	66700	1 2 .		
98	15.13	3502	2.97	67981	1 4 .		
90	16.43	3805	2.61	68981	1 6 .		
81	18.11	4214	2.44	69783	1 8 .		
68	21.75	5026	2.11	70489	2 0 .		
62	23.97	5556	1.94	70879	2 2 .		
57	26.07	5986	1.75	71531	2 5 .		
52	28.25	6522	1.53	74395	2 8 .		
43	34.51	7975	1.34	73585	3 2 .		
39	37.39	8614	1.25	73200	3 6 .		
37	39.42	9061	1.1	80293	4 0 .		
35	42.71	9804	1.02	80900	4 5 .		
36	41.36	9447	1.03	65600	M 1 4 3 1 4 0 . _ M _ - _ _ 3 7 . A - -	691	D225S
31	48.21	10991	1	65600	4 5 .		
27	54.75	12464	0.88	65600	5 0 .		

NOTE

Other output speeds are available using 2 and 8 pole motors - Consult Textron Power Transmission

0205

37.0 kW

6 POLE

N2 R/MIN	i	M2 Nm	Fm	N	Unit Designation	Kg	
Output Speed	Ratio	Output Torque	Service Factor	Overhung Load	Column Entry 1 Through 20 Spaces to be filled when entering order	Weight of base mount unit	Motor Size
337	2.9	1015	1.71	43841	M 1 3 2 1 2 . 8 _ M _ - _ _ 3 7 . C - -	646	D250M
307	3.19	1114	1.71	44290	3 . 2		
269	3.64	1272	1.71	44889	3 . 6		
243	4.03	1412	1.71	45387	4 . 0		
222	4.42	1552	1.71	45836	4 . 5		
194	5.04	1762	1.71	46484	5 . 0		
177	5.54	1937	1.71	47183	5 . 6		
158	6.21	2177	1.71	47880	6 . 3		
142	6.88	2416	1.71	48579	7 . 1		
126	7.78	2719	1.71	49375	8 . 0		
114	8.62	3011	1.71	49668	9 . 0		
99	9.89	3466	1.71	49805	1 0 .		
88	11.2	3935	1.51	49993	1 1 .		
79	12.39	4326	1.47	50155	1 2 .		
70	14.03	4902	1.28	50000	1 4 .		
61	15.97	5590	1.11	50005	1 6 .		
54	18	6294	0.98	49909	1 8 .		
49	20	6974	0.91	50450	2 0 .		
43	22.55	7855	0.81	50204	2 2 .		
339	2.89	1008	2.5	56704	M 1 4 2 1 2 . 8 _ M _ - _ _ 3 7 . C - -	761	D250M
302	3.25	1136	2.5	58176	3 . 2		
256	3.82	1332	2.5	59320	3 . 6		
243	4.03	1412	2.5	59720	4 . 0		
216	4.54	1588	2.5	60492	4 . 5		
184	5.33	1864	2.5	61608	5 . 0		
163	6	2096	2.5	62780	5 . 6		
150	6.55	2292	2.5	63724	6 . 3		
135	7.27	2544	2.5	64768	7 . 1		
113	8.67	3028	2.5	66456	8 . 0		
102	9.62	3360	2.5	67500	9 . 0		
97	10.06	3524	2.5	68000	1 0 .		
86	11.43	3996	2.5	69288	1 1 .		
74	13.32	4632	2.2	70620	1 2 .		
65	15.13	5286	1.97	71327	1 4 .		
60	16.43	5731	1.94	72900	1 6 .		
54	18.11	6315	1.76	74046	1 8 .		
45	21.75	7577	1.4	74209	2 0 .		
41	23.97	8364	1.29	73310	2 2 .		
38	26.07	9104	1.16	74410	2 5 .		
35	28.25	9829	1.02	73395	2 8 .		
28	34.51	12006	0.89	69259	3 2 .		
26	37.39	12961	0.83	67840	3 6 .		

NOTE

Other output speeds are available using 2 and 8 pole motors - Consult Textron Power Transmission

0205

45.0 kW

4 POLE

N2 R/MIN	i	M2 Nm	Fm	N	Unit Designation	Kg	
Output Speed	Ratio	Output Torque	Service Factor	Overhung Load	Column Entry 1 Through 20 Spaces to be filled when entering order	Weight of base mount unit	Motor Size
997	1.48	420	1.77	13100	M 0 9 2 1 1 . 4 _ M _ - _ _ 4 5 . A - -	462	D225M
724	2.04	579	1.72	14400	1 . 8		
646	2.28	650	1.66	14800	2 . 2		
576	2.56	727	1.49	15300	2 . 5		
497	2.97	840	1.67	16200	2 . 8		
447	3.3	945	1.15	16400	3 . 2		
400	3.69	1055	1.03	16900	3 . 6		
361	4.09	1158	1.38	17300	4 . 0		
322	4.58	1303	1.29	17500	4 . 5		
291	5.07	1441	1.21	17700	5 . 0		
259	5.69	1610	1.13	17700	5 . 6		
223	6.63	1883	1.02	17400	6 . 3		
199	7.4	2101	0.95	16500	7 . 1		
179	8.22	2329	0.89	16400	8 . 0		
161	9.19	2608	0.83	15200	9 . 0		
1023	1.44	408	1.77	17800	M 1 0 2 1 1 . 4 _ M _ - _ _ 4 5 . A - -	508	D225M
732	2.01	571	1.77	19700	1 . 8		
673	2.19	622	1.77	20200	2 . 2		
593	2.49	707	1.77	21000	2 . 5		
493	2.99	842	1.77	22300	2 . 8		
455	3.24	919	1.66	22600	3 . 2		
421	3.5	995	1.57	23100	3 . 6		
353	4.18	1182	1.77	24600	4 . 0		
325	4.55	1289	1.77	24900	4 . 5		
299	4.94	1397	1.77	25100	5 . 0		
275	5.37	1521	1.77	25300	5 . 6		
219	6.72	1905	1.65	25700	6 . 3		
203	7.26	2055	1.57	25800	7 . 1		
186	7.95	2249	1.48	26200	8 . 0		
172	8.58	2424	1.41	26400	9 . 0		
139	10.59	3003	1.23	26800	1 0 .		
123	11.98	3396	1.11	27100	1 1 .		
118	12.51	3540	1.1	27300	1 2 .		
104	14.16	3999	1.01	27500	1 4 .		
90	16.43	4645	0.81	24900	1 6 .		
508	2.9	820	2.12	38925	M 1 3 2 1 2 . 8 _ M _ - _ _ 4 5 . A - -	569	D225M
463	3.19	900	2.12	39925	3 . 2		
405	3.64	1023	2.12	41475	3 . 6		
366	4.03	1141	2.12	42625	4 . 0		
334	4.42	1254	2.12	43700	4 . 5		
293	5.04	1424	2.12	44350	5 . 0		
266	5.54	1565	2.12	44800	5 . 6		
238	6.21	1759	2.12	45250	6 . 3		
214	6.88	1947	2.12	45700	7 . 1		
190	7.78	2197	2.12	46400	8 . 0		
171	8.62	2433	2.12	46875	9 . 0		
149	9.89	2801	2.12	47475	1 0 .		
132	11.2	3177	1.87	47863	1 1 .		
119	12.39	3498	1.82	48391	1 2 .		
105	14.03	3958	1.59	47540	1 4 .		
92	15.97	4511	1.37	48275	1 6 .		
82	18	5088	1.22	47925	1 8 .		
74	20	5629	1.13	47850	2 0 .		
65	22.55	6341	1	47493	2 2 .		
58	25.45	7161	0.87	48500	2 5 .		
511	2.89	813	3.1	50194	M 1 4 2 1 2 . 8 _ M _ - _ _ 4 5 . A - -	681	D225M
454	3.25	917	3.1	51979	3 . 2		
386	3.82	1075	3.1	54449	3 . 6		
366	4.03	1139	3.1	55249	4 . 0		
325	4.54	1281	3.1	57218	4 . 5		
277	5.33	1504	3.1	58588	5 . 0		
246	6	1691	3.1	59358	5 . 6		
225	6.55	1850	3.1	59943	6 . 3		
203	7.27	2053	3.1	60628	7 . 1		
170	8.67	2444	3.1	62052	8 . 0		
153	9.62	2712	3.1	63022	9 . 0		
147	10.06	2841	3.1	63507	1 0 .		
129	11.43	3238	2.83	64762	1 1 .		
111	13.32	3729	2.74	66171	1 2 .		
98	15.13	4259	2.44	67275	1 4 .		
90	16.43	4628	2.15	68275	1 6 .		
81	18.11	5125	2.01	68850	1 8 .		
68	21.75	6113	1.73	68830	2 0 .		
62	23.97	6757	1.6	69010	2 2 .		
57	26.07	7280	1.44	69167	2 5 .		
52	28.25	7932	1.26	72575	2 8 .		
43	34.51	9699	1.1	70925	3 2 .		
39	37.39	10477	1.03	70400	3 6 .		
37	39.42	11020	0.9	80100	4 0 .		

NOTE

Other output speeds are available using 2 and 8 pole motors - Consult Textron Power Transmission

0205

45.0 kW

6 POLE

N2 R/MIN	i	M2 Nm	Fm	N	Unit Designation	Kg	
Output Speed	Ratio	Output Torque	Service Factor	Overhung Load	Column Entry 1 Through 20 Spaces to be filled when entering order	Weight of base mount unit	Motor Size
337	2.9	1235	1.41	43556	M 1 3 2 1 2 . 8 _ M _ - _ _ 4 5 . C - -	771	D280S
307	3.19	1355	1.41	43983	3 . 2		
269	3.64	1547	1.41	44538	3 . 6		
243	4.03	1717	1.41	44993	4 . 0		
222	4.42	1888	1.41	45420	4 . 5		
194	5.04	2143	1.41	46002	5 . 0		
177	5.54	2356	1.41	46657	5 . 6		
158	6.21	2647	1.41	47267	6 . 3		
142	6.88	2938	1.41	47921	7 . 1		
126	7.78	3307	1.41	48586	8 . 0		
114	8.62	3662	1.41	48660	9 . 0		
99	9.89	4216	1.41	48380	1 0 .		
88	11.2	4786	1.24	48173	1 1 .		
79	12.39	5261	1.21	48175	1 2 .		
70	14.03	5962	1.05	47600	1 4 .		
61	15.97	6798	0.91	47025	1 6 .		
54	18	7655	0.81	46527	1 8 .		
339	2.89	1226	2.06	56480	M 1 4 2 1 2 . 8 _ M _ - _ _ 4 5 . C - -	886	D280S
302	3.25	1381	2.06	57920	3 . 2		
256	3.82	1620	2.06	59000	3 . 6		
243	4.03	1717	2.06	59400	4 . 0		
216	4.54	1931	2.06	60140	4 . 5		
184	5.33	2267	2.06	61160	5 . 0		
163	6	2549	2.06	62300	5 . 6		
150	6.55	2787	2.06	63180	6 . 3		
135	7.27	3094	2.06	64160	7 . 1		
113	8.67	3683	2.06	65720	8 . 0		
102	9.62	4087	2.06	66700	9 . 0		
97	10.06	4286	2.06	67200	1 0 .		
86	11.43	4860	2.06	68360	1 1 .		
74	13.32	5634	1.81	69500	1 2 .		
65	15.13	6429	1.62	69848	1 4 .		
60	16.43	6970	1.59	71566	1 6 .		
54	18.11	7681	1.45	72336	1 8 .		
45	21.75	9216	1.15	71316	2 0 .		
41	23.97	10172	1.06	70550	2 2 .		
38	26.07	11072	0.96	72050	2 5 .		
35	28.25	11954	0.83	71086	2 8 .		

NOTE

Other output speeds are available using 2 and 8 pole motors - Consult Textron Power Transmission

55.0 kW

	N2 R/MIN Output Speed	i Ratio	M2 Nm Output Torque	Fm Service Factor	N Overhung Load	Unit Designation Column Entry 1 Through 20 Spaces to be filled when entering order	Kg Weight of base mount unit	Motor Size
4 POLE	508	2.9	1002	1.73	38741	M 1 3 2 1 2 . 8 _ M _ - _ _ 5 5 . A - -	646	D250M
	463	3.19	1100	1.73	39741	3 . 2		
	405	3.64	1250	1.73	41258	3 . 6		
	366	4.03	1394	1.73	42375	4 . 0		
	334	4.42	1533	1.73	43433	4 . 5		
	293	5.04	1740	1.73	44050	5 . 0		
	266	5.54	1913	1.73	44466	5 . 6		
	238	6.21	2150	1.73	44883	6 . 3		
	214	6.88	2380	1.73	45300	7 . 1		
	190	7.78	2686	1.73	45933	8 . 0		
	171	8.62	2974	1.73	46258	9 . 0		
	149	9.89	3423	1.73	46591	1 0 .		
	132	11.2	3883	1.53	46760	1 1 .		
	119	12.39	4275	1.49	47126	1 2 .		
	105	14.03	4837	1.3	45593	1 4 .		
	92	15.97	5513	1.12	46300	1 6 .		
	82	18	6219	1	45500	1 8 .		
	74	20	6880	0.92	45100	2 0 .		
	65	22.55	7750	0.82	44400	2 2 .		
	511	2.89	994	2.53	50062	M 1 4 2 1 2 . 8 _ M _ - _ _ 5 5 . A - -	761	D250M
	454	3.25	1120	2.53	51828	3 . 2		
	386	3.82	1314	2.53	54260	3 . 6		
	366	4.03	1393	2.53	55060	4 . 0		
	325	4.54	1566	2.53	56992	4 . 5		
	277	5.33	1839	2.53	58324	5 . 0		
	246	6	2067	2.53	59056	5 . 6		
	225	6.55	2261	2.53	59622	6 . 3		
	203	7.27	2510	2.53	60288	7 . 1		
	170	8.67	2987	2.53	61618	8 . 0		
	153	9.62	3315	2.53	62550	9 . 0		
	147	10.06	3472	2.53	63016	1 0 .		
	129	11.43	3957	2.31	64215	1 1 .		
	111	13.32	4557	2.24	65511	1 2 .		
	98	15.13	5206	2	66391	1 4 .		
	90	16.43	5657	1.76	67391	1 6 .		
	81	18.11	6264	1.64	67683	1 8 .		
	68	21.75	7472	1.42	66757	2 0 .		
	62	23.97	8259	1.31	66674	2 2 .		
	57	26.07	8898	1.18	66211	2 5 .		
	52	28.25	9695	1.03	70300	2 8 .		
	43	34.51	11855	0.9	67600	3 2 .		
	39	37.39	12805	0.84	66900	3 6 .		
6 POLE	337	2.9	1509	1.15	43200	M 1 3 2 1 2 . 8 _ M _ - _ _ 5 5 . C - -	861	D280M
	307	3.19	1657	1.15	43600	3 . 2		
	269	3.64	1891	1.15	44100	3 . 6		
	243	4.03	2099	1.15	44500	4 . 0		
	222	4.42	2307	1.15	44900	4 . 5		
	194	5.04	2620	1.15	45400	5 . 0		
	177	5.54	2880	1.15	46000	5 . 6		
	158	6.21	3236	1.15	46500	6 . 3		
	142	6.88	3591	1.15	47100	7 . 1		
	126	7.78	4042	1.15	47600	8 . 0		
	114	8.62	4476	1.15	47400	9 . 0		
	99	9.89	5153	1.15	46600	1 0 .		
	88	11.2	5850	1.02	45900	1 1 .		
	79	12.39	6430	0.99	45700	1 2 .		
	70	14.03	7287	0.86	44600	1 4 .		
	339	2.89	1498	1.68	56200	M 1 4 2 1 2 . 8 _ M _ - _ _ 5 5 . C - -	976	D280M
	302	3.25	1688	1.68	57600	3 . 2		
	256	3.82	1980	1.68	58600	3 . 6		
	243	4.03	2099	1.68	59000	4 . 0		
	216	4.54	2360	1.68	59700	4 . 5		
	184	5.33	2771	1.68	60600	5 . 0		
	163	6	3116	1.68	61700	5 . 6		
	150	6.55	3407	1.68	62500	6 . 3		
	135	7.27	3782	1.68	63400	7 . 1		
	113	8.67	4501	1.68	64800	8 . 0		
	102	9.62	4995	1.68	65700	9 . 0		
	97	10.06	5239	1.68	66200	1 0 .		
	86	11.43	5940	1.68	67200	1 1 .		
	74	13.32	6886	1.48	68100	1 2 .		
	65	15.13	7858	1.32	68000	1 4 .		
	60	16.43	8519	1.3	69900	1 6 .		
	54	18.11	9388	1.18	70200	1 8 .		
	45	21.75	11264	0.94	67700	2 0 .		
	41	23.97	12433	0.87	67100	2 2 .		

NOTE

Other output speeds are available using 2 and 8 pole motors - Consult Textron Power Transmission

75.0 kW

4 POLE

N2 R/MIN	i	M2 Nm	Fm	N	Unit Designation	Kg	
Output Speed	Ratio	Output Torque	Service Factor	Overhung Load	Column Entry 1 Through 20 Spaces to be filled when entering order	Weight of base mount unit	Motor Size
511	2.9	1358	1.28	38375	M 1 3 2 1 2 . 8 _ M _ - _ _ 7 5 . A - -	771	D280S
466	3.19	1491	1.28	39375	3 . 2		
408	3.64	1694	1.28	40825	3 . 6		
369	4.03	1889	1.28	41875	4 . 0		
336	4.42	2076	1.28	42900	4 . 5		
295	5.04	2357	1.28	43450	5 . 0		
268	5.54	2592	1.28	43800	5 . 6		
239	6.21	2912	1.28	44150	6 . 3		
216	6.88	3224	1.28	44500	7 . 1		
191	7.78	3638	1.28	45000	8 . 0		
172	8.62	4028	1.28	45025	9 . 0		
150	9.89	4637	1.28	44825	1 0 .		
133	11.2	5259	1.13	44554	1 1 .		
120	12.39	5791	1.1	44597	1 2 .		
106	14.03	6552	0.96	41700	1 4 .		
514	2.89	1347	1.87	49798	M 1 4 2 1 2 . 8 _ M _ - _ _ 7 5 . A - -	886	D280S
457	3.25	1518	1.87	51526	3 . 2		
389	3.82	1780	1.87	53883	3 . 6		
369	4.03	1886	1.87	54683	4 . 0		
327	4.54	2122	1.87	56539	4 . 5		
278	5.33	2490	1.87	57796	5 . 0		
247	6	2801	1.87	58452	5 . 6		
227	6.55	3062	1.87	58981	6 . 3		
204	7.27	3399	1.87	59609	7 . 1		
171	8.67	4046	1.87	60750	8 . 0		
154	9.62	4490	1.87	61607	9 . 0		
148	10.06	4703	1.87	62035	1 0 .		
130	11.43	5360	1.71	63120	1 1 .		
111	13.32	6173	1.65	64190	1 2 .		
98	15.13	7052	1.47	64625	1 4 .		
90	16.43	7662	1.3	65625	1 6 .		
82	18.11	8484	1.21	65350	1 8 .		
68	21.75	10120	1.05	62610	2 0 .		
62	23.97	11186	0.97	62003	2 2 .		
57	26.07	12052	0.87	60300	2 5 .		

90.0 kW

4 POLE

N2 R/MIN	i	M2 Nm	Fm	N	Unit Designation	Kg	
Output Speed	Ratio	Output Torque	Service Factor	Overhung Load	Column Entry 1 Through 20 Spaces to be filled when entering order	Weight of base mount unit	Motor Size
511	2.9	1630	1.07	38100	M 1 3 2 1 2 . 8 _ M _ - _ _ 9 0 . A - -	861	D280M
466	3.19	1789	1.07	39100	3 . 2		
408	3.64	2033	1.07	40500	3 . 6		
369	4.03	2267	1.07	41500	4 . 0		
336	4.42	2492	1.07	42500	4 . 5		
295	5.04	2829	1.07	43000	5 . 0		
268	5.54	3110	1.07	43300	5 . 6		
239	6.21	3494	1.07	43600	6 . 3		
216	6.88	3869	1.07	43900	7 . 1		
191	7.78	4365	1.07	44300	8 . 0		
172	8.62	4834	1.07	44100	9 . 0		
150	9.89	5565	1.07	43500	1 0 .		
133	11.2	6311	0.94	42900	1 1 .		
120	12.39	6949	0.91	42700	1 2 .		
514	2.89	1616	1.56	49600	M 1 4 2 1 2 . 8 _ M _ - _ _ 9 0 . A - -	976	D280M
457	3.25	1821	1.56	51300	3 . 2		
389	3.82	2136	1.56	53600	3 . 6		
369	4.03	2264	1.56	54400	4 . 0		
327	4.54	2546	1.56	56200	4 . 5		
278	5.33	2989	1.56	57400	5 . 0		
247	6	3361	1.56	58000	5 . 6		
227	6.55	3675	1.56	58500	6 . 3		
204	7.27	4079	1.56	59100	7 . 1		
171	8.67	4855	1.56	60100	8 . 0		
154	9.62	5388	1.56	60900	9 . 0		
148	10.06	5644	1.56	61300	1 0 .		
130	11.43	6432	1.42	62300	1 1 .		
111	13.32	7407	1.38	63200	1 2 .		
98	15.13	8462	1.23	63300	1 4 .		
90	16.43	9195	1.08	64300	1 6 .		
82	18.11	10181	1.01	63600	1 8 .		
68	21.75	12144	0.87	59500	2 0 .		
62	23.97	13424	0.8	58500	2 2 .		

NOTE

Other output speeds are available using 2 and 8 pole motors - Consult Textron Power Transmission

DIMENSIONS - SINGLE REDUCTION BASE MOUNT

0205

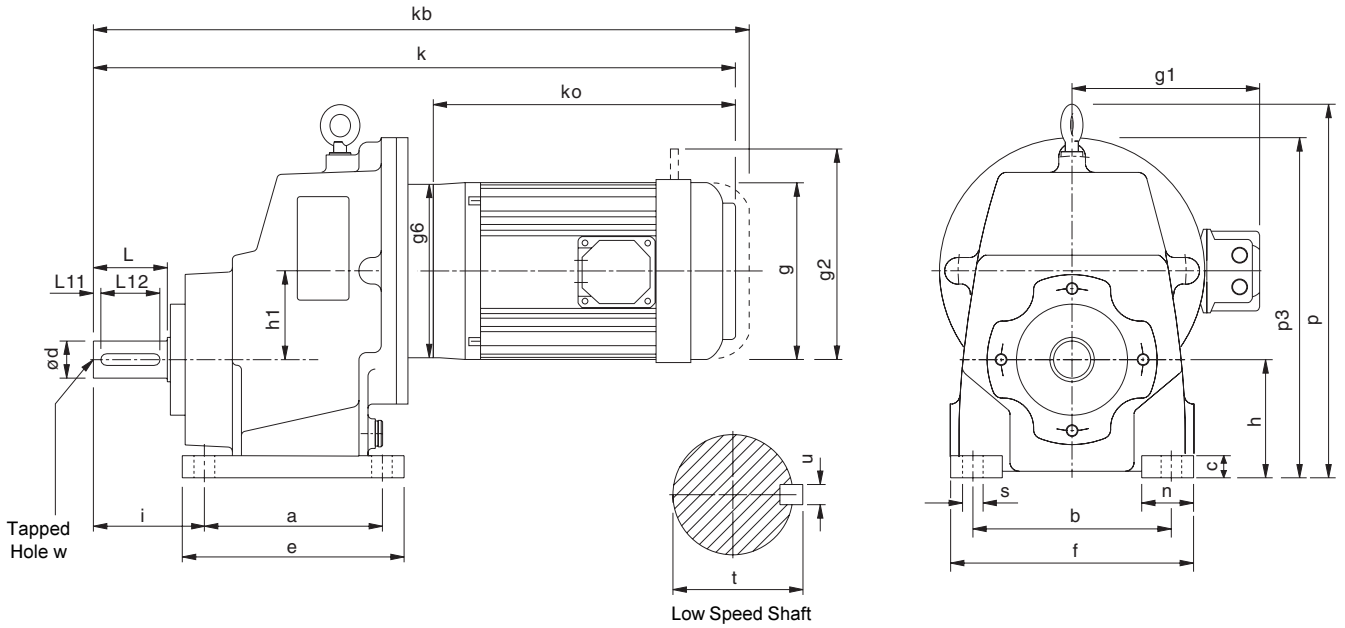

SIZE	a	b	c	e	f	h	h1	i	n	p	p3	s	Low Speed Shaft						
													d	L	L11	L12	t	u	w
M0512	110	125	17	137	152	63	47	56	27	218	180	11	20 k6	40	4	32	22.5	6	M6 x 1 16 deep
M0612	120	135	20	150	170	80	60	75	35	258	230	14	25 k6	50	5	40	28	8	M10 x 1.5 22 deep
M0712	150	170	25	190	212	90	74	85	42	306	270	17.5	30 k6	60	5	50	33	8	M10 x 1.5 22 deep
M0812	160	215	30	206	265	100	97	110	60	352	322	17.5	40 k6	80	5	70	43	12	M16 x 2.0 36 deep

MOTORS		ALL SIZES					M0512		M0612		M0712		M0812	
		ko	g	g1	g2	g6	k	kb	k	kb	k	kb	k	kb
MOTOR FRAME SIZE	63	218	122	96	160	140	425	470	448	493				
	71	221	138	102	167	105	432	477	455	500				
	80A	239	157	125	190	120	463	516	486	539	513	566	551	604
	80B	248	157	125	190	120	472	525	495	548	522	575	560	613
	90S	260	177	133	218	140	494	546	517	569	544	596	582	634
	90L	275	177	133	218	140	509	561	532	584	559	611	597	649
	90LA	284	177	133	218	140	517	569	540	592	567	619	605	657
	100L	310	197	144	238	160			577	637	619	679	642	702
	112M	325	219	155	238	160			592	666	634	708	657	731
	112MA	344	219	155	238	160			611	685	653	727	676	750
	132SA	392	235	172	288	200			659	742	701	784	726	809
	132M	412	235	172	288	200			679	762	721	804	746	829
	132MA	436	235	172	288	200			703	786	745	828	770	853
	132MB	472	235	172	288	200			739	822	781	864	806	889
	160M	455	273	282	-	350					764	847	789	872
	160L	500	273	282	-	350					809	892	834	917

kb - for brake motors
g2 - hand release if required

all parallel keys are to DIN 6885

DIMENSIONS - DOUBLE REDUCTION BASE MOUNT

0205

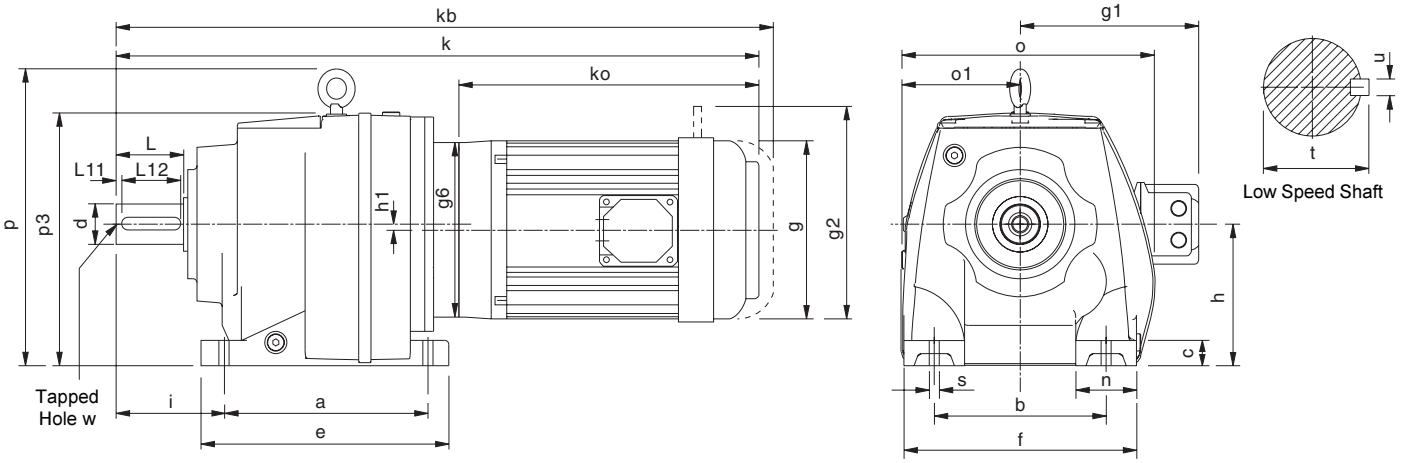

SIZE	a	b	c	e	f	h	h1	i	n	o	o1	p	p3	s	Low Speed Shaft						
															d	L	L11	L12	t	u	w
M0122	110	110	12	131	135	75	-	58	25	152	76	-	149	10	20 k6	40	4	32	22.5	6	M6 x 1 16 deep
M0222	130	110	16	152	145	90	-	75	35	170	84	-	180	10	25 k6	50	4	40	28	8	M10 x 1.5 22 deep
M0322	130	110	16	152	145	90	-	75	35	170	84	-	180	10	25 k6	50	4	40	28	8	M10 x 1.5 22 deep
M0422	165	135	20	200	190	115	-	90	55	204	97	-	208	15	30 k6	60	4	50	33	8	M10 x 1.5 22 deep
M0522	165	135	20	200	190	115	-	100	55	204	97	-	208	15	35 k6	70	7	60	38	10	M12 x 1.75 28 deep
M0622	195	150	24	235	210	130	14.5	100	60	220	110	246	214	15	35 k6	70	7	60	38	10	M12 x 1.75 28 deep
M0722	205	170	25	245	230	140	-	115	60	252	119	295	250	19	40 k6	80	5	70	43	12	M16 x 2.0 36 deep
M0822	260	215	35	310	290	180	-	140	75	320	167	360	310	19	50 k6	100	10	80	53.5	14	M16 x 2.0 36 deep
M0921	310	250	40	365	340	225	-	160	90	372	200	433	394	23	60 m6	120	10	100	64	18	M20 x 2.5 42 deep
M1021	370	290	45	440	400	250	-	185	110	428	225	505	446	27	70 m6	140	15	110	74.5	20	M20 x 2.5 42 deep
M1321	410	340	50	490	450	265	-	220	110	470	242	563	483	34	90 m6	170	15	140	95	25	M24 x 3.0 50 deep
M1421	500	380	50	590	530	300	-	260	150	546	278	630	551	41	100 m6	210	15	180	106	28	M24 x 3.0 50 deep

Motor Frame Size	All Sizes					M0122		M0222		M0322		M0422		M0522		M0622		M0722		M0822		M0921		M1021		M1321		M1421	
	ko	g	g1	g2	g6	k	kb	k	kb	k	kb	k	kb	k	kb	k	kb	k	kb	k	kb	k	kb	k	kb	k	kb	k	kb
63	218	122	96	160	140	427	472	458	503	458	503																		
71	221	138	102	167	105	434	479	465	510	465	510																		
80A	239	157	125	190	120	465	518	496	549	496	549	533	586	543	596	564	617	601	654	681	734	763	815						
80B	248	157	125	190	120	474	527	505	558	505	558	542	595	552	605	573	626	610	663	690	743	771	824						
90S	260	177	133	218	140	496	548	527	579	527	579	564	616	574	626	595	669	632	684	702	754	783	835						
90L	275	177	133	218	140	511	563	542	594	542	594	579	631	589	641	610	662	647	699	717	769	798	850						
90LA	284	177	133	218	140	520	572	551	603	551	603	588	640	598	650	619	671	656	708	726	778	807	859						
100L	310	197	144	238	160							639	699	649	709	670	730	692	752	752	812	833	893	906	966	1027	1087	1142	1202
112M	325	219	155	238	160							654	728	664	738	685	759	707	781	767	841	848	922	921	995	1042	1116	1157	1231
112MA	344	219	155	238	160							673	747	683	757	704	778	726	800	786	860	867	941	940	1014	1061	1135	1176	1250
132SA	392	235	172	288	200													776	859	834	917	915	998	988	1071	1109	1192	1224	1307
132M	412	235	172	288	200													796	879	854	937	935	1018	1008	1091	1129	1212	1244	1327
132MA	436	235	172	288	200													820	903	878	961	959	1042	1032	1115	1153	1236	1268	1351
132MB	472	235	172	288	200													856	939	914	997	995	1078	1068	1151	1189	1272	1304	1387
160M	455	273	282	325	350															903	986	1019	1102	1086	1169	1165	1248	1280	1363
160L	500	273	282	325	350															948	1031	1064	1147	1131	1214	1210	1293	1325	1408
180M	557	382	307		350																	1121		1188		1267		1382	
180L	595	382	307		350																	1159		1226		1305		1420	
200L	658	420	372		400																	1222		1289		1368		1483	
225S	671	458	427		450																	1262		1329		1381		1496	
225M	696	458	427		450																	1287		1354		1406		1521	
250M	771	510	490		550																					1481		1596	
280S	837	576	520		550																					1547		1662	
280M	888	576	520		550																					1598		1713	

kb - for brake motors
g2 - hand release if required

all parallel keys are to DIN 6885

DIMENSIONS - TRIPLE REDUCTION BASE MOUNT

0205

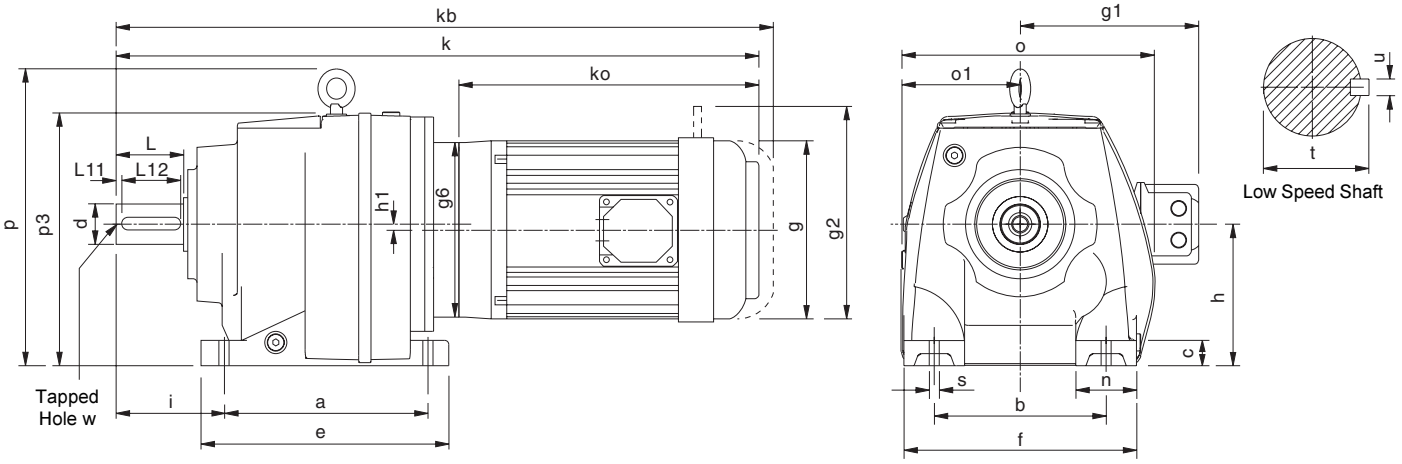

SIZE	a	b	c	e	f	h	h1	i	n	o	o1	p	p3	s	Low Speed Shaft						
															d	L	L11	L12	t	u	w
M0132	110	110	12	131	135	75	-	58	25	152	76	-	149	10	20 k6	40	4	32	22.5	6	M6 x 1 16 deep
M0232	130	110	16	152	145	90	-	75	35	170	84	-	180	10	25 k6	50	4	40	28	8	M10 x 1.5 22 deep
M0332	130	110	16	152	145	90	-	75	35	170	84	-	180	10	25 k6	50	4	40	28	8	M10 x 1.5 22 deep
M0432	165	135	20	200	190	115	-	90	55	204	97	-	208	15	30 k6	60	4	50	33	8	M10 x 1.5 22 deep
M0532	165	135	20	200	190	115	-	100	55	204	97	-	208	15	35 k6	70	7	60	38	10	M12 x 1.75 28 deep
M0632	195	150	24	235	210	130	14.5	100	60	220	110	246	214	15	35 k6	70	7	60	38	10	M12 x 1.75 28 deep
M0732	205	170	25	245	230	140	-	115	60	252	119	295	250	19	40 k6	80	5	70	43	12	M16 x 2.0 36 deep
M0832	260	215	35	310	290	180	-	140	75	320	167	360	310	19	50 k6	100	10	80	53.5	14	M16 x 2.0 36 deep
M0931	310	250	40	365	340	225	-	160	90	372	200	433	394	23	60 m6	120	10	100	64	18	M20 x 2.5 42 deep
M1031	370	290	45	440	400	250	-	185	110	428	225	505	446	27	70 m6	140	15	110	74.5	20	M20 x 2.5 42 deep
M1331	410	340	50	490	450	265	-	220	110	470	242	563	483	34	90 m6	170	15	140	95	25	M24 x 3.0 50 deep
M1431	500	380	50	590	530	300	-	260	150	546	278	630	551	41	100 m6	210	15	180	106	28	M24 x 3.0 50 deep

Motor Frame Size	All Sizes					M0132		M0232		M0332		M0432		M0532		M0632		M0732		M0832		M0931		M1031		M1331		M1431	
	ko	g	g1	g2	g6	k	kb	k	kb	k	kb	k	kb	k	kb	k	kb	k	kb	k	kb	k	kb	k	kb	k	kb	k	kb
63	218	122	96	160	140	442	487	471	516	471	516	518	563	528	573	549	594												
71	221	138	102	167	105	449	494	478	523	478	523	525	570	535	580	556	601												
80A	239	157	125	190	120	480	533	509	562	509	562	556	609	566	619	587	640	616	669	701	754	788	841	886	939				
80B	248	157	125	190	120	489	542	518	571	518	571	565	618	575	628	596	649	625	678	710	763	797	850	895	948				
90S	260	177	133	218	140	511	563	540	592	540	592	587	639	597	649	618	670	647	699	732	784	809	861	907	959				
90L	275	177	133	218	140	526	578	555	607	555	607	602	654	612	664	633	685	662	714	747	799	824	876	922	974				
90LA	284	177	133	218	140	535	587	564	616	564	616	611	663	621	673	642	694	671	723	756	808	833	885	931	983				
100L	310	197	144	238	160													722	782	792	852	865	925	957	1017				
112M	325	219	155	238	160													737	811	807	881	880	954	972	1046	1104	1178	1229	1303
112MA	344	219	155	238	160													756	830	826	900	899	973	991	1065	1123	1197	1248	1322
132SA	392	235	172	288	200																			1039	1122	1171	1254	1296	1379
132M	412	235	172	288	200																			1059	1142	1191	1274	1316	1399
132MA	436	235	172	288	200																			1083	1166	1215	1298	1340	1423
132MB	472	235	172	288	200																			1119	1202	1251	1334	1376	1459
160M	455	273	282	325	350																			1143	1226	1227	1310	1352	1435
160L	500	273	282	325	350																			1188	1271	1272	1355	1397	1480
180M	557	382	307		350																			1245		1329		1454	
180L	595	382	307		350																			1283		1367		1492	
200L	658	420	372		400																					1430		1555	
225S	671	458	427		450																					1443		1568	
225M	696	458	427		450																					1468		1593	

kb - for brake motors
g2 - hand release if required

all parallel keys are to DIN 6885

DIMENSIONS - QUADRUPLE REDUCTION BASE MOUNT

0206

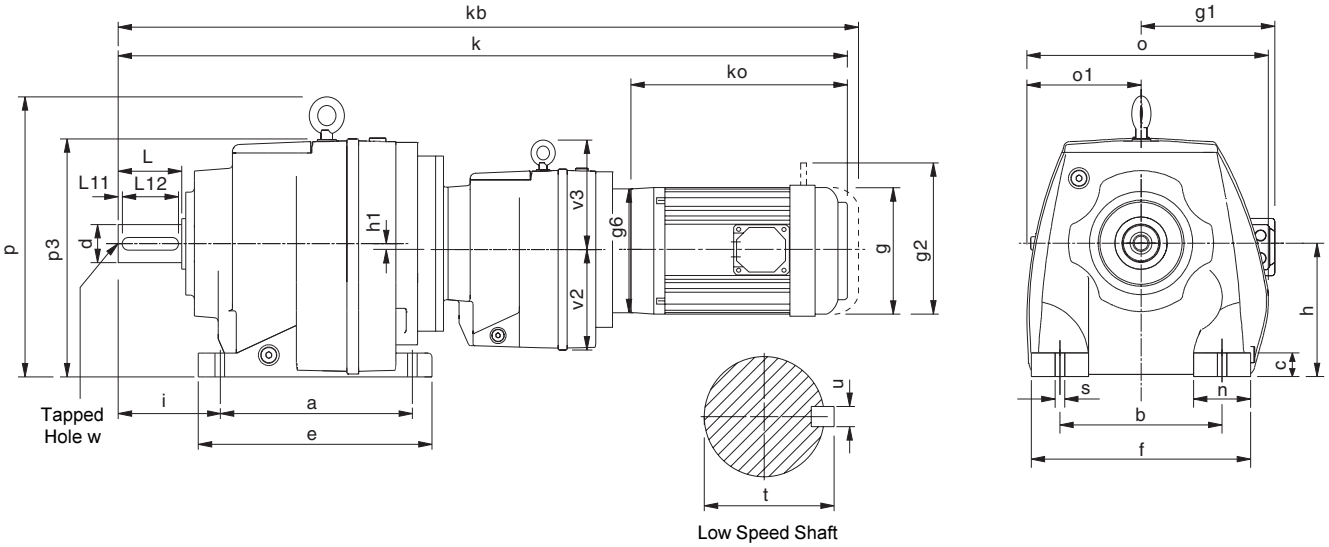

SIZE	a	b	c	e	f	h	h1	i	n	o	o1	p	p3	s	v2	v3	Low Speed Shaft d	L	L11	L12	t	u	w
M0342	130	110	16	152	145	90	-	75	35	170	84	-	180	10	76	-	25 k6	50	4	40	28	8	M10 x 1.5 22 deep
M0442	165	135	20	200	190	115	-	90	55	204	97	-	208	15	91	-	30 k6	60	4	50	33	8	M10 x 1.5 22 deep
M0542	165	135	20	200	190	115	-	100	55	204	97	-	208	15	91	-	35 k6	70	7	60	38	10	M12 x 1.75 28 deep
M0642	195	150	24	235	210	130	14.5	100	60	220	110	246	214	15	91	-	35 k6	70	7	60	38	10	M12 x 1.75 28 deep
M0742	205	170	25	245	230	140	-	115	60	252	119	295	250	19	91	-	40 k6	80	5	70	43	12	M16 x 2.0 36 deep
M0842	260	215	35	310	290	180	-	140	75	320	167	360	310	19	115	-	50 k6	100	10	80	53.5	14	M16 x 2.0 36 deep
M0941	310	250	40	365	340	225	-	160	90	372	200	433	394	23	115	-	60 m6	120	10	100	64	18	M20 x 2.5 42 deep
M1041	370	290	45	440	400	250	-	185	110	428	225	505	446	27	140	155	70 m6	140	15	110	74.5	20	M20 x 2.5 42 deep
M1341	410	340	50	490	450	265	-	220	110	470	242	563	483	34	140	155	90 m6	170	15	140	95	25	M24 x 3.0 50 deep
M1441	500	380	50	590	530	300	-	260	150	546	278	630	551	41	140	155	100 m6	210	15	180	106	28	M24 x 3.0 50 deep

Motor Frame Size	All Sizes					M0342		M0442		M0542		M0642		M0742		M0842		M0941		M1041		M1341		M1441	
	ko	g	g1	g2	g6	k	kb	k	kb	k	kb	k	kb	k	kb	k	kb	k	kb	k	kb	k	kb	k	kb
63	218	122	96	160	140	644	689	712	754	722	767	743	788	780	825										
71	221	138	102	167	105	651	696	719	760	729	774	750	795	787	832										
80A	239	157	125	190	120	682	735	750	800	760	813	781	834	818	871	915	968	996	1049	1117	1170	1238	1291	1353	1406
80B	248	157	125	190	120	691	744	759	809	769	822	790	843	827	880	924	977	1005	1058	1126	1179	1247	1300	1362	1415
90S	260	177	133	218	140	713	765	781	840	791	843	812	864	849	901	946	998	1027	1079	1148	1200	1269	1321	1384	1436
90L	275	177	133	218	140	728	780	800	855	806	858	827	879	864	916	961	1013	1042	1094	1163	1215	1284	1336	1399	1451
90LA	284	177	133	218	140	737	789	805	864	815	867	836	888	873	925	970	1022	1051	1103	1172	1224	1293	1345	1408	1460
100L	310	197	144	238	160											1051	1111	1132	1192	1238	1298	1359	1419	1399	1459
112M	325	219	155	238	160															1223	1297	1344	1418	1459	1533
112MA	344	219	155	238	160															1242	1316	1363	1437	1403	1477
132SA	392	235	172	288	200															1292	1375	1413	1496	1528	1611
132M	412	235	172	288	200															1312	1395	1433	1516	1473	1556
132MA	436	235	172	288	200															1336	1419	1457	1540	1572	1655
132MB	472	235	172	288	200															1372	1455	1493	1576	1608	1691

kb - for brake motors
g2 - hand release if required

all parallel keys are to DIN 6885

DIMENSIONS - QUINTUPLE REDUCTION BASE MOUNT

0206

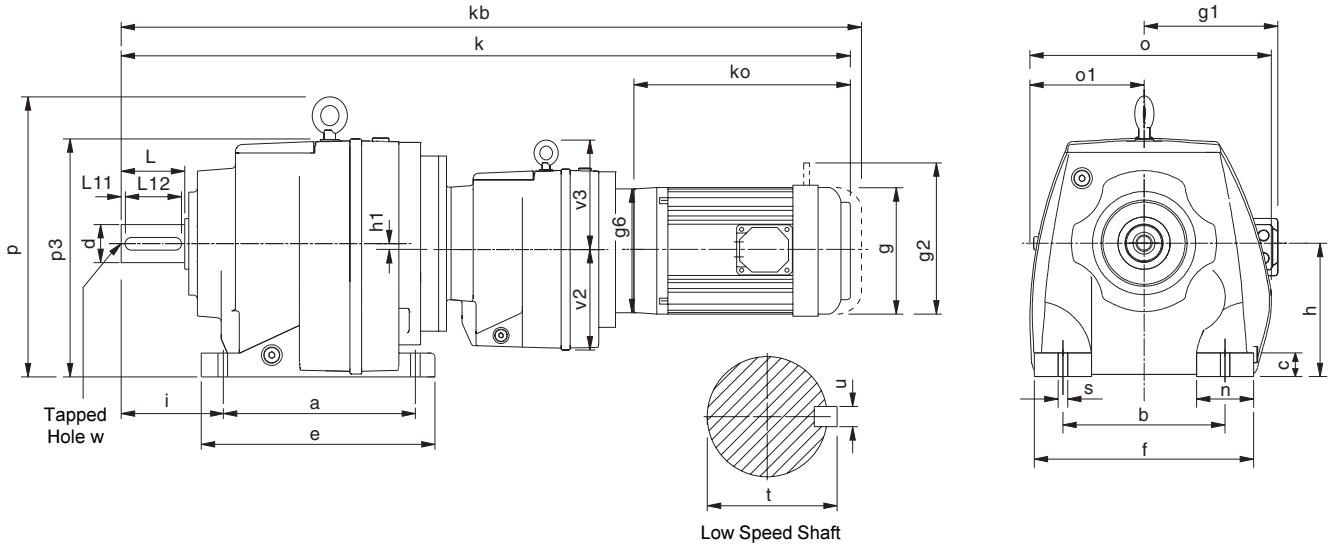

SIZE	a	b	c	e	f	h	h1	i	n	o	o1	p	p3	s	v2	v3	Low Speed Shaft						
																	d	L	L11	L12	t	u	w
M0352	130	110	16	152	145	90	-	75	35	170	84	-	180	10	76	-	25 k6	50	4	40	28	8	M10 x 1.5 22 deep
M0452	165	135	20	200	190	115	-	90	55	204	97	-	208	15	91	-	30 k6	60	4	50	33	8	M10 x 1.5 22 deep
M0552	165	135	20	200	190	115	-	100	55	204	97	-	208	15	91	-	35 k6	70	7	60	38	10	M12 x 1.75 28 deep
M0652	195	150	24	235	210	130	14.5	100	60	220	110	246	214	15	91	-	35 k6	70	7	60	38	10	M12 x 1.75 28 deep
M0752	205	170	25	245	230	140	-	115	60	252	119	295	250	19	91	-	40 k6	80	5	70	43	12	M16 x 2.0 36 deep
M0852	260	215	35	310	290	180	-	140	75	320	167	360	310	19	115	-	50 k6	100	10	80	53.5	14	M16 x 2.0 36 deep
M0951	310	250	40	365	340	225	-	160	90	372	200	433	394	23	115	-	60 m6	120	10	100	64	18	M20 x 2.5 42 deep
M1051	370	290	45	440	400	250	-	185	110	428	225	505	446	27	140	155	70 m6	140	15	110	74.5	20	M20 x 2.5 42 deep
M1351	410	340	50	490	450	265	-	220	110	470	242	563	483	34	140	155	90 m6	170	15	140	95	25	M24 x 3.0 50 deep
M1451	500	380	50	590	530	300	-	260	150	546	278	630	551	41	140	155	100 m6	210	15	180	106	28	M24 x 3.0 50 deep

Motor Frame Size	All Sizes					M0352		M0452		M0552		M0652		M0752		M0852		M0951		M1051		M1351		M1451	
	ko	g	g1	g2	g6	k	kb	k	kb	k	kb	k	kb	k	kb	k	kb	k	kb	k	kb	k	kb	k	kb
63	218	122	96	160	140	659	704	725	770	735	780	756	801	793	838	900	945	981	1026						
71	221	138	102	167	105	666	711	732	777	742	787	763	808	800	845	907	952	988	1033						
80A	239	157	125	190	120	697	750	763	808	773	826	794	847	831	884	938	991	1019	1072	1132	1185	1253	1306	1368	1421
80B	248	157	125	190	120	706	759	772	817	782	835	803	856	840	893	947	1000	1028	1081	1141	1194	1262	1315	1377	1430
90S	260	177	133	218	140	728	780	794	847	804	856	825	877	862	914	969	1021	1050	1102	1163	1215	1284	1336	1399	1451
90L	275	177	133	218	140	743	795	809	862	819	871	840	892	877	929	984	1036	1065	1117	1178	1230	1299	1351	1414	1466
90LA	284	177	133	218	140	752	804	818	870	828	880	849	901	886	938	993	1045	1074	1126	1187	1239	1308	1360	1348	1400
100L	310	197	144	238	160															1238	1298	1359	1419	1474	1534

kb - for brake motors
g2 - hand release if required

all parallel keys are to DIN 6885

DIMENSIONS - SINGLE REDUCTION FLANGE MOUNT

0205

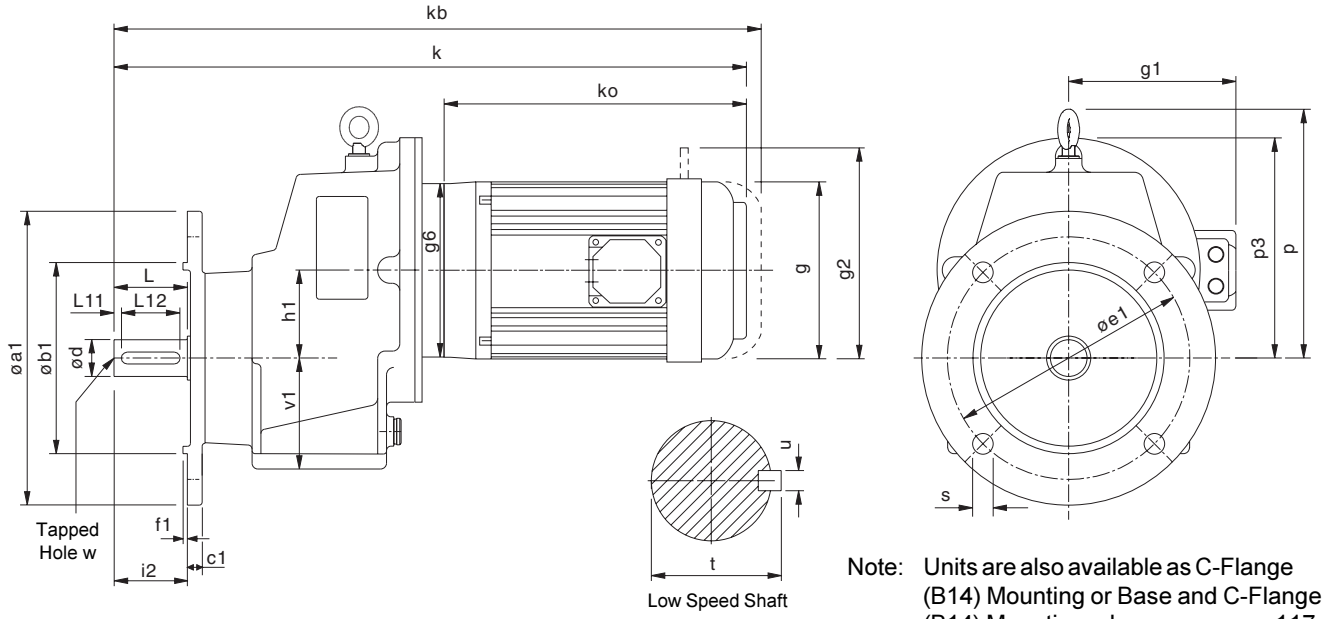

Note: Units are also available as C-Flange (B14) Mounting or Base and C-Flange (B14) Mounting, please see page 117 for details

SIZE	øa1	øb1	c1	øe1	f1	h1	i2	p	p3	s	v1	Low Speed Shaft d	L	L11	L12	t	u	w
M0512	120	80	9	100	3	47	40	155	117	9	56	20 k6	40	4	32	22.5	6	M6 x 1 16 deep
	140	95	9	115	3		40			9								
	160	110	10	130	3.5		40			9								
	200	130	10	165	3.5		40			12								
M0612	120	80	10	100	3	60	50	178	150	6.6	72	25 k6	50	5	40	28	8	M10 x 1.5 22 deep
	140	95	10	115	3		50			9								
	160	110	10	130	3.5		50			9								
	200	130	10	165	3.5		50			11								
M0712	140	95	10	115	3	74	60	216	180	9	83	30 k6	60	5	50	33	8	M10 x 1.5 22 deep
	160	110	10	130	3.5		60			9								
	200	130	11	165	4		60			11								
	250	180	11	215	4		60			13.5								
M0812	200	130	11	165	4	97	80	252	220	11	97	40 k6	80	5	70	43	12	M16 x 2.0 36 deep
	250	180	11	215	4		80			13.5								
	300	230	11	265	4		80			13.5								

MOTORS		ALL SIZES					M0512		M0612		M0712		M0812	
		ko	g	g1	g2	g6	k	kb	k	kb	k	kb	k	kb
MOTOR FRAME SIZE	63	218	122	96	160	140	425	470	448	493				
	71	221	138	102	167	105	432	477	455	500				
	80A	239	157	125	190	120	463	516	486	539	513	566	551	604
	80B	248	157	125	190	120	472	525	495	548	522	575	560	613
	90S	260	177	133	218	140	494	546	517	569	544	596	582	634
	90L	275	177	133	218	140	509	561	532	584	559	611	597	649
	90LA	284	177	133	218	140	517	569	540	592	567	619	605	657
	100L	310	197	144	238	160			577	637	619	679	642	702
	112M	325	219	155	238	160			592	666	634	708	657	731
	112MA	344	219	155	238	160			611	685	653	727	676	750
	132SA	392	235	172	288	200			659	742	701	784	726	809
	132M	412	235	172	288	200			679	762	721	804	746	829
	132MA	436	235	172	288	200			703	786	745	828	770	853
	132MB	472	235	172	288	200			739	822	781	864	806	889
	160M	455	273	282	-	350					764	847	789	872
	160L	500	273	282	-	350					809	892	834	917

kb - for brake motors
g2 - hand release if required

all parallel keys are to DIN 6885

DIMENSIONS - DOUBLE REDUCTION FLANGE MOUNT

0205

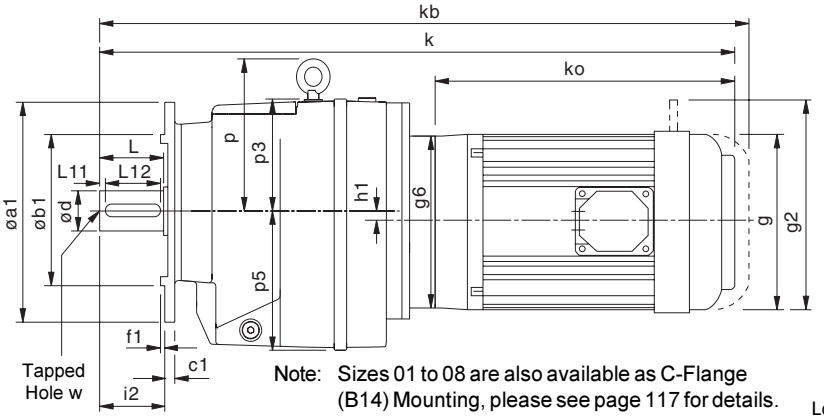

Note: Sizes 01 to 08 are also available as C-Flange (B14) Mounting, please see page 117 for details.

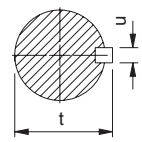

Low Speed Shaft

Sizes 1, 2, 3, 4, 5, 6, 7 and 8

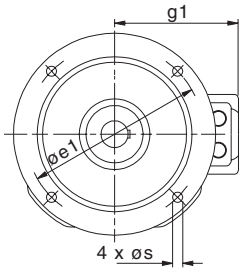

Sizes 9, 10, 13 and 14

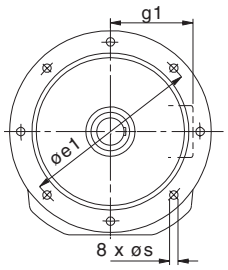

SIZE	øa1	øb1	c1	øe1	f1	h1	i2	p	p3	p5	s	Low Speed Shaft d	L	L11	L12	t	u	w
M0122	120	80	9	100	3	-	40	-	74	76	9	20 k6	40	4	32	22.5	6	M6 x 1 16 deep
	140	95	9	115	3		40				9							
	160	110	10	130	3.5		40				9							
	200	130	10	165	3.5		40				11							
M0222	120	80	10	100	3	-	50	-	90	91	6.6	25 k6	50	4	40	28	8	M10 x 1.5 22 deep
	140	95	10	115	3		50				9							
	160	110	10	130	3.5		50				9							
	200	130	10	165	3.5		50				11							
M0322	120	80	10	100	3	-	50	-	90	91	6.6	25 k6	50	4	40	28	8	M10 x 1.5 22 deep
	140	95	10	115	3		50				9							
	160	110	10	130	3.5		50				9							
	200	130	10	165	3.5		50				11							
M0422	140	95	11	115	3	-	60	-	93	115	9	30 k6	60	4	50	33	8	M10 x 1.5 22 deep
	160	110	11	130	3.5		60				9							
	200	130	11	165	3.5		60				11							
	250	180	11	215	4		60				13.5							
M0522	140	95	11	115	3	-	70	-	93	115	9	35 k6	70	7	60	38	10	M12 x 1.75 28 deep
	160	110	11	130	3.5		70				9							
	200	130	11	165	3.5		70				11							
	250	180	11	215	4		70				13.5							
M0622	200	130	11	165	4	14.5	70	116	84	130	11	35 k6	70	7	60	38	10	M12 x 1.75 28 deep
	250	180	11	215	4		70				13.5							
	300	230	11	265	4		70				13.5							
M0722	200	130	11	165	3.5	-	80	155	110	140	11	40 k6	80	5	70	43	12	M16 x 2.0 36 deep
	250	180	11	215	4		80				13.5							
	300	230	11	265	4		80				13.5							
M0822	300	230	17	265	4	-	100	180	130	182	13.5	50 k6	100	10	80	53.5	14	M16 x 2.0 36 deep
	350	250	17	300	5		100				17.5							
M0921	450	350	18	400	5	-	140	198	-	230	18	60 m6	120	10	100	64	18	M20 x 2.5 42 deep
M1021	450	350	22	400	5	-	140	245	-	260	18	70 m6	140	15	110	74.5	20	M20 x 2.5 42 deep
M1321	550	450	25	500	5	-	170	288	-	278	18	90 m6	170	15	140	95	25	M24 x 3.0 50 deep
M1421	550	450	25	500	5	-	210	320	-	318	18	100 m6	210	15	180	106	28	M24 x 3.0 50 deep

Motor Frame Size	All Sizes					M0121		M0222		M0322		M0422		M0522		M0622		M0722		M0822		M0921		M1021		M1321		M1421	
	ko	g	g1	g2	g6	k	kb	k	kb	k	kb	k	kb	k	kb	k	kb	k	kb	k	kb	k	kb	k	kb	k	kb	k	kb
63	218	122	96	160	140	427	472	458	503	458	503																		
71	221	138	102	167	105	434	479	465	510	465	510																		
80A	239	157	125	190	120	465	518	496	549	496	549	533	586	543	596	564	617	601	654	681	734	762	815						
80B	248	157	125	190	120	474	527	505	558	505	558	542	595	552	605	573	626	610	663	690	743	771	824						
90S	260	177	133	218	140	496	548	527	579	527	579	564	616	574	626	595	669	632	684	702	754	783	835						
90L	275	177	133	218	140	511	563	542	594	542	594	579	631	589	641	610	662	647	699	717	769	798	850						
90LA	284	177	133	218	140	520	572	551	603	551	603	588	640	598	650	619	671	656	708	726	778	807	859						
100L	310	197	144	238	160							639	699	649	709	670	730	692	752	752	812	833	893	906	966	1027	1087	1142	1202
112M	325	219	155	238	160							654	728	664	738	685	759	707	781	767	841	848	922	921	995	1042	1116	1157	1231
112MA	344	219	155	238	160							673	747	683	757	704	778	726	800	786	860	867	941	940	1014	1061	1135	1176	1250
132SA	392	235	172	288	200													776	859	834	917	915	998	988	1071	1109	1192	1224	1307
132M	412	235	172	288	200													796	879	854	937	935	1018	1008	1091	1129	1212	1244	1327
132MA	436	235	172	288	200													820	903	878	961	959	1042	1032	1115	1153	1236	1268	1351
132MB	472	235	172	288	200													856	939	914	997	995	1078	1068	1151	1189	1272	1304	1387
160M	455	273	282	325	350															903	986	1019	1102	1086	1169	1165	1248	1280	1363
160L	500	273	282	325	350															948	1031	1064	1147	1131	1214	1210	1293	1325	1408
180M	557	382	307		350																	1121		1188		1267		1382	
180L	595	382	307		350																	1159		1226		1305		1420	
200L	658	420	372		400																	1222		1289		1368		1483	
225S	671	458	427		450																	1262		1329		1381		1496	
225M	696	458	427		450																	1287		1354		1406		1521	
250M	771	510	490		550																					1481		1596	
280S	837	576	520		550																					1547		1662	
280M	888	576	520		550																					1598		1713	

kb - for brake motors g2 - hand release if required all parallel keys are to DIN 6885

DIMENSIONS - TRIPLE REDUCTION FLANGE MOUNT

0205

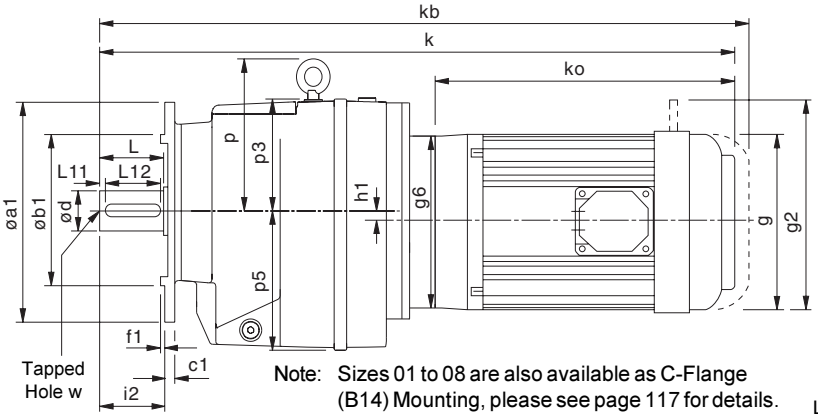

Note: Sizes 01 to 08 are also available as C-Flange (B14) Mounting, please see page 117 for details.

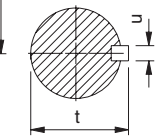

Low Speed Shaft

Sizes 1, 2, 3, 4, 5, 6, 7 and 8

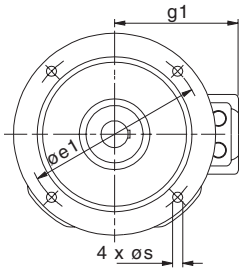

Sizes 9, 10, 13 and 14

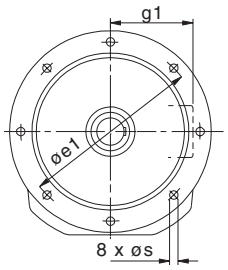

SIZE	øa1	øb1	c1	øe1	f1	h1	i2	p	p3	p5	s	Low Speed Shaft d	L	L11	L12	t	u	w
M0132	120	80	9	100	3	-	40	-	74	76	9	20 k6	40	4	32	22.5	6	M6 x 1 16 deep
	140	95	9	115	3		40				9							
	160	110	10	130	3.5		40				9							
	200	130	10	165	3.5		40				11							
M0232	120	80	10	100	3	-	50	-	90	91	6.6	25 k6	50	4	40	28	8	M10 x 1.5 22 deep
	140	95	10	115	3		50				9							
	160	110	10	130	3.5		50				9							
	200	130	10	165	3.5		50				11							
M0332	120	80	10	100	3	-	50	-	90	91	6.6	25 k6	50	4	40	28	8	M10 x 1.5 22 deep
	140	95	10	115	3		50				9							
	160	110	10	130	3.5		50				9							
	200	130	10	165	3.5		50				11							
M0432	140	95	11	115	3	-	60	-	93	115	9	30 k6	60	4	50	33	8	M10 x 1.5 22 deep
	160	110	11	130	3.5		60				9							
	200	130	11	165	3.5		60				11							
	250	180	11	215	4		60				13.5							
M0532	140	95	11	115	3	-	70	-	93	115	9	35 k6	70	7	60	38	10	M12 x 1.75 28 deep
	160	110	11	130	3.5		70				9							
	200	130	11	165	3.5		70				11							
	250	180	11	215	4		70				13.5							
M0632	200	130	11	165	4	14.5	70	116	84	130	11	35 k6	70	7	60	38	10	M12 x 1.75 28 deep
	250	180	11	215	4		70				13.5							
	300	230	11	265	4		70				13.5							
M0732	200	130	11	165	3.5	-	80	155	110	140	11	40 k6	80	5	70	43	12	M16 x 2.0 36 deep
	250	180	11	215	4		80				13.5							
	300	230	11	265	4		80				13.5							
M0832	300	230	17	265	4	-	100	180	130	182	13.5	50 k6	100	10	80	53.5	14	M16 x 2.0 36 deep
	350	250	17	300	5		100				17.5							
M0931	450	350	18	400	5	-	140	198	-	230	18	60 m6	120	10	100	64	18	M20 x 2.5 42 deep
M1031	450	350	22	400	5	-	140	245	-	260	18	70 m6	140	15	110	74.5	20	M20 x 2.5 42 deep
M1331	550	450	25	500	5	-	170	288	-	278	18	90 m6	170	15	140	95	25	M24 x 3.0 50 deep
M1431	550	450	25	500	5	-	210	320	-	318	18	100 m6	210	15	180	106	28	M24 x 3.0 50 deep

Motor Frame Size	All Sizes					M0131		M0232		M0332		M0432		M0532		M0632		M0732		M0832		M0931		M1031		M1331		M1431	
	ko	g	g1	g2	g6	k	kb	k	kb	k	kb	k	kb	k	kb	k	kb	k	kb	k	kb	k	kb	k	kb	k	kb	k	kb
63	218	122	96	160	140	442	487	471	516	471	516	518	563	528	573	549	594												
71	221	138	102	167	105	449	494	478	523	478	523	525	570	535	580	556	601												
80A	239	157	125	190	120	480	533	509	562	509	562	556	609	566	619	587	640	616	669	701	754	788	841	886	939				
80B	248	157	125	190	120	489	542	518	571	518	571	565	618	575	628	596	649	625	678	710	763	797	850	895	948				
90S	260	177	133	218	140	511	563	540	592	540	592	587	639	597	649	618	670	647	699	732	784	809	861	907	959				
90L	275	177	133	218	140	526	578	555	607	555	607	602	654	612	664	633	685	662	714	747	799	824	876	922	974				
90LA	284	177	133	218	140	535	587	564	616	564	616	611	663	621	673	642	694	671	723	756	808	833	885	931	983				
100L	310	197	144	238	160													722	782	792	852	865	925	957	1017				
112M	325	219	155	238	160													737	811	807	881	880	954	972	1046	1104	1178	1229	1303
112MA	344	219	155	238	160													756	830	826	900	899	973	991	1065	1123	1197	1248	1322
132SA	392	235	172	288	200																			1039	1122	1171	1254	1296	1379
132M	412	235	172	288	200																			1059	1142	1191	1274	1316	1399
132MA	436	235	172	288	200																			1083	1166	1215	1298	1340	1423
132MB	472	235	172	288	200																			1119	1202	1251	1334	1376	1459
160M	455	273	282	325	350																			1143	1226	1227	1310	1352	1435
160L	500	273	282	325	350																			1188	1271	1272	1355	1397	1480
180M	557	382	307		350																			1245		1329		1454	
180L	595	382	307		350																			1283		1367		1492	
200L	658	420	372		400																					1430		1555	
225S	671	458	427		450																					1443		1568	
225M	696	458	427		450																					1468		1593	

kb - for brake motors
g2 - hand release if required

all parallel keys are to DIN 6885

DIMENSIONS - QUADRUPLE REDUCTION FLANGE MOUNT

0206

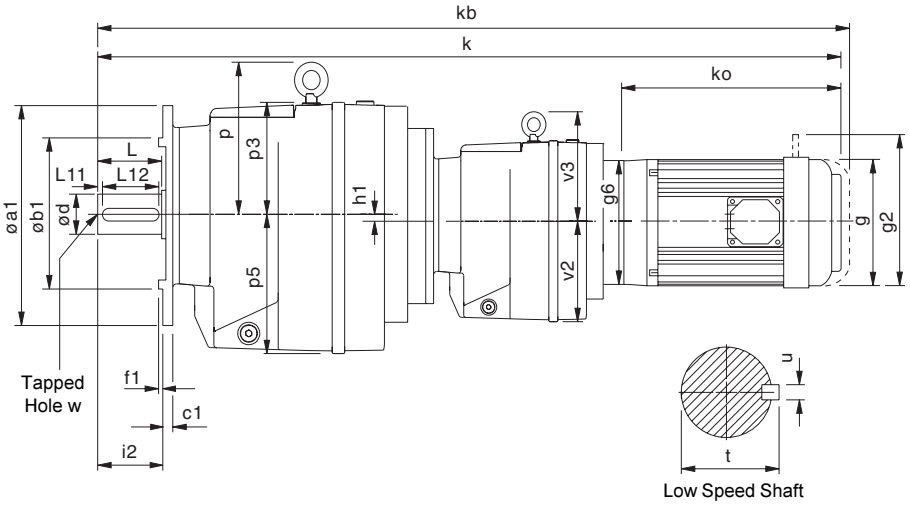

Sizes 3, 4, 5, 6, 7 and 8

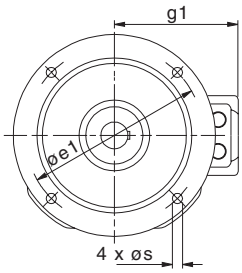

Sizes 9, 10, 13 and 14

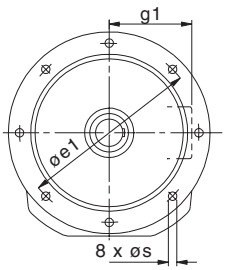

Note: Sizes 03 to 08 are also available as C-Flange (B14) Mounting, please see page 117 for details.

SIZE	øa1	øb1	c1	øe1	f1	h1	i2	p	p3	p5	s	v2	v3	Low Speed Shaft d	L	L11	L12	t	u	w
M0342	120	80	10	100	3	-	50	-	89	91	6.6	76	-	25 k6	50	4	40	28	8	M10 x 1.5 22 deep
	140	95	10	115	3		50				9									
	160	110	10	130	3.5		50				9									
	200	130	10	165	3.5		50				11									
M0442	140	95	11	115	3	-	60	-	91	115	9	91	-	30 k6	60	4	50	33	8	M10 x 1.5 22 deep
	160	110	11	130	3.5		60				9									
	200	130	11	165	3.5		60				11									
	250	180	11	215	4		60				13.5									
M0542	140	95	11	115	3	-	70	-	91	115	9	91	-	35 k6	70	7	60	38	10	M12 x 1.75 28 deep
	160	110	11	130	3.5		70				9									
	200	130	11	165	3.5		70				11									
	250	180	11	215	4		70				13.5									
M0642	200	130	11	165	4	14.5	70	113	81	130	11	91	-	35 k6	70	7	60	38	10	M12 x 1.75 28 deep
	250	180	11	215	4		70				13.5									
	300	230	11	265	4		70				13.5									
M0742	200	130	11	165	3.5	-	80	152	107	140	11	91	-	40 k6	80	5	70	43	12	M16 x 2.0 36 deep
	250	180	11	215	4		80				13.5									
	300	230	11	265	4		80				13.5									
M0842	300	230	17	265	4	-	100	175	125	182	13.5	115	-	50 k6	100	10	80	53.5	14	M16 x 2.0 36 deep
	350	250	17	300	5		100				17.5									
M0941	450	350	18	400	5	-	140	198	-	230	18	115	-	60 m6	120	10	100	64	18	M20x2.5 42 deep
M1041	450	350	22	400	5	-	140	245	-	260	18	140	155	70 m6	140	15	110	74.5	20	M20x2.5 42 deep
M1341	550	450	25	500	5	-	170	288	-	278	18	140	155	90 m6	170	15	140	95	25	M24x3.0 50 deep
M1441	550	450	25	500	5	-	210	320	-	318	18	140	155	100 m6	210	15	180	106	28	M24x3.0 50 deep

Motor Frame Size	All Sizes					M0342		M0442		M0542		M0642		M0742		M0842		M0941		M1041		M1341		M1441	
	ko	g	g1	g2	g6	k	kb	k	kb	k	kb	k	kb	k	kb	k	kb	k	kb	k	kb	k	kb	k	kb
63	218	122	96	160	140	644	689	712	754	722	767	743	788	780	825										
71	221	138	102	167	105	651	696	719	760	729	774	750	795	787	832										
80A	239	157	125	190	120	682	735	750	800	760	813	781	834	818	871	915	968	996	1049	1117	1170	1238	1291	1353	1406
80B	248	157	125	190	120	691	744	759	809	769	822	790	843	827	880	924	977	1005	1058	1126	1179	1247	1300	1362	1415
90S	260	177	133	218	140	713	765	781	840	791	843	812	864	849	901	946	998	1027	1079	1148	1200	1269	1321	1384	1436
90L	275	177	133	218	140	728	780	800	855	806	858	827	879	864	916	961	1013	1042	1094	1163	1215	1284	1336	1399	1451
90LA	284	177	133	218	140	737	789	805	860	815	867	836	888	873	925	970	1022	1051	1103	1172	1224	1293	1345	1408	1460
100L	310	197	144	238	160											1051	1111	1132	1192	1238	1298	1359	1419	1399	1459
112M	325	219	155	238	160															1223	1297	1344	1418	1459	1533
112MA	344	219	155	238	160															1242	1316	1363	1437	1403	1477
132SA	392	235	172	288	200															1292	1375	1413	1496	1528	1611
132M	412	235	172	288	200															1312	1395	1433	1516	1473	1556
132MA	436	235	172	288	200															1336	1419	1457	1540	1572	1655
132MB	472	235	172	288	200															1372	1455	1493	1576	1608	1691

kb - for brake motors
g2 - hand release if required

all parallel keys are to DIN 6885

DIMENSIONS - QUINTUPLE REDUCTION FLANGE MOUNT

0206

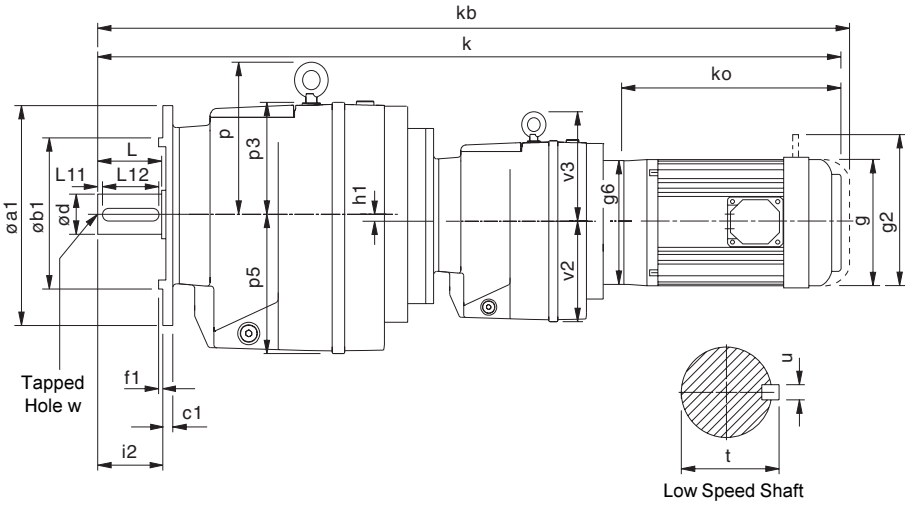

Sizes 3, 4, 5, 6, 7 and 8

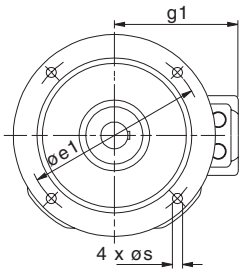

Sizes 9, 10, 13 and 14

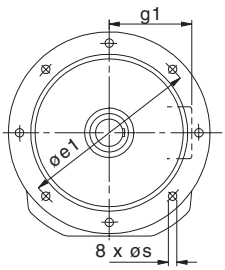

Note: Sizes 03 to 08 are also available as C-Flange (B14) Mounting, please see page 117 for details.

SIZE	øa1	øb1	c1	øe1	f1	h1	i2	p	p3	p5	s	v2	v3	Low Speed Shaft d	L	L11	L12	t	u	w
M0352	120	80	10	100	3	-	50	-	89	91	6.6	76	-	25 k6	50	4	40	28	8	M10 x 1.5 22 deep
	140	95	10	115	3		50				9									
	160	110	10	130	3.5		50				9									
	200	130	10	165	3.5		50				11									
M0452	140	95	11	115	3	-	60	-	91	115	9	91	-	30 k6	60	4	50	33	8	M10 x 1.5 22 deep
	160	110	11	130	3.5		60				9									
	200	130	11	165	3.5		60				11									
	250	180	11	215	4		60				13.5									
M0552	140	95	11	115	3	-	70	-	91	115	9	91	-	35 k6	70	7	60	38	10	M12 x 1.75 28 deep
	160	110	11	130	3.5		70				9									
	200	130	11	165	3.5		70				11									
	250	180	11	215	4		70				13.5									
M0652	200	130	11	165	4	14.5	70	113	81	130	11	91	-	35 k6	70	7	60	38	10	M12 x 1.75 28 deep
	250	180	11	215	4		70				13.5									
	300	230	11	265	4		70				13.5									
M0752	200	130	11	165	3.5	-	80	152	107	140	11	91	-	40 k6	80	5	70	43	12	M16 x 2.0 36 deep
	250	180	11	215	4		80				13.5									
	300	230	11	265	4		80				13.5									
M0852	300	230	17	265	4	-	100	175	125	182	13.5	115	-	50 k6	100	10	80	53.5	14	M16 x 2.0 36 deep
	350	250	17	300	5		100				17.5									
M0951	450	350	18	400	5	-	140	198	-	230	18	115	-	60 m6	120	10	100	64	18	M20x2.5 42 deep
M1051	450	350	22	400	5	-	140	245	-	260	18	140	155	70 m6	140	15	110	74.5	20	M20x2.5 42 deep
M1351	550	450	25	500	5	-	170	288	-	278	18	140	155	90 m6	170	15	140	95	25	M24x3.0 50 deep
M1451	550	450	25	500	5	-	210	320	-	318	18	140	155	100 m6	210	15	180	106	28	M24x3.0 50 deep

Motor Frame Size	All Sizes					M0352		M0452		M0552		M0652		M0752		M0852		M0951		M1051		M1351		M1451	
	ko	g	g1	g2	g6	k	kb	k	kb	k	kb	k	kb	k	kb	k	kb	k	kb	k	kb	k	kb	k	kb
63	218	122	96	160	140	659	704	725	770	735	780	756	801	793	838	900	945	981	1026						
71	221	138	102	167	105	666	711	732	777	742	787	763	808	800	845	907	952	988	1033						
80A	239	157	125	190	120	697	750	763	808	773	826	794	847	831	884	938	991	1019	1072	1132	1185	1253	1306	1368	1421
80B	248	157	125	190	120	706	759	772	817	782	835	803	856	840	893	947	1000	1028	1081	1141	1194	1262	1315	1377	1430
90S	260	177	133	218	140	728	780	794	847	804	856	825	877	862	914	969	1021	1050	1102	1163	1215	1284	1336	1399	1451
90L	275	177	133	218	140	743	795	809	862	819	871	840	892	877	929	984	1036	1065	1117	1178	1230	1299	1351	1414	1466
90LA	284	177	133	218	140	752	804	818	870	828	880	849	901	886	938	993	1045	1074	1126	1187	1239	1308	1360	1348	1400
100L	310	197	144	238	160															1238	1298	1359	1419	1474	1534

kb - for brake motors
g2 - hand release if required

all parallel keys are to DIN 6885

MOTORISED BACKSTOP MODULE

0103

Motorised backstop modules can be fitted between the gear unit and motor. The backstop device incorporates high quality centrifugal lift off sprags which are wear free above the lift off speed (n min).
To ensure correct operation motor speed must exceed lift off speed.

Suitable for ambient temperature -40°C to + 50°C

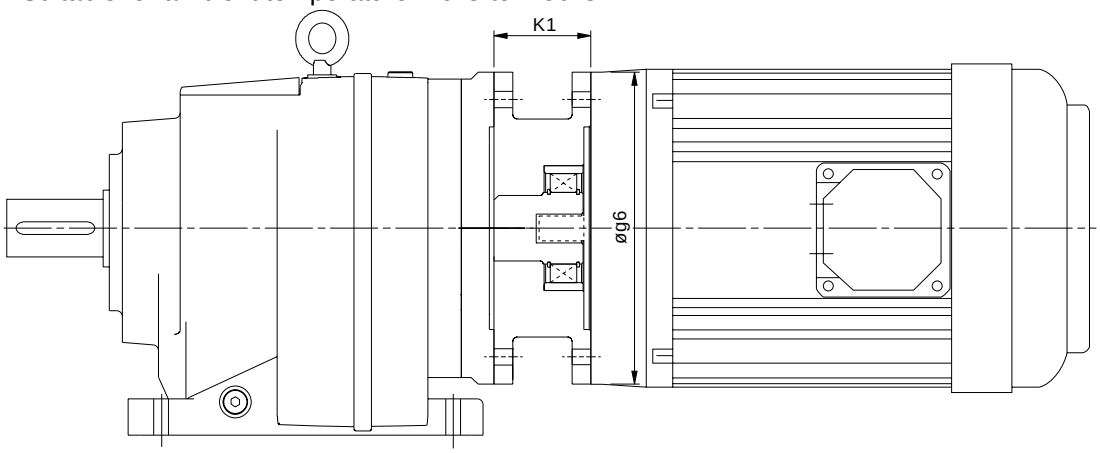

Warning

Removal of motor or backstop will release the drive. Ensure all driven machinery is secure prior to any maintenance work

IEC B5 FLANGE

Motor Frame Size	Lift off Speed ('n' min) (rev/min)	Rated Locking Torque ('T max') (at motor) (Nm)	øg6	K1
100	670	170	250	70
112	670	170	250	70
132	620	940	300	95
160	620	940	350	130
180	620	940	350	130
200	550	1260	400	130

NEMA C FLANGE

Motor Frame Size	Lift off Speed ('n' min) (rev/min)	Rated Locking Torque ('T max') (at motor) (Nm)	øg6	K1
182TC / 184TC	670	300	228	95.25
213TC / 215 TC	670	300	228	95.25
254TC / 256TC	620	940	228	120.65
284TC / 286TC	620	940	280	136.50
324TC / 326TC	550	1260	330	152.4

When a backstop module is fitted dimension K1 should be added to the overall length of the geared motor assembly.

Rotation of outputshaft must be specified when ordering as viewed from the outputshaft end (as shown in the diagram) see page 22 for column 20 entry

CW	-	Free Rotation	-	Clockwise
		Locked	-	Anticlockwise
AC	-	Free Rotation	-	Anticlockwise
		Locked	-	Clockwise

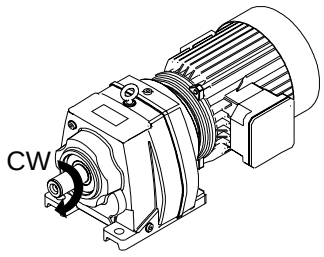

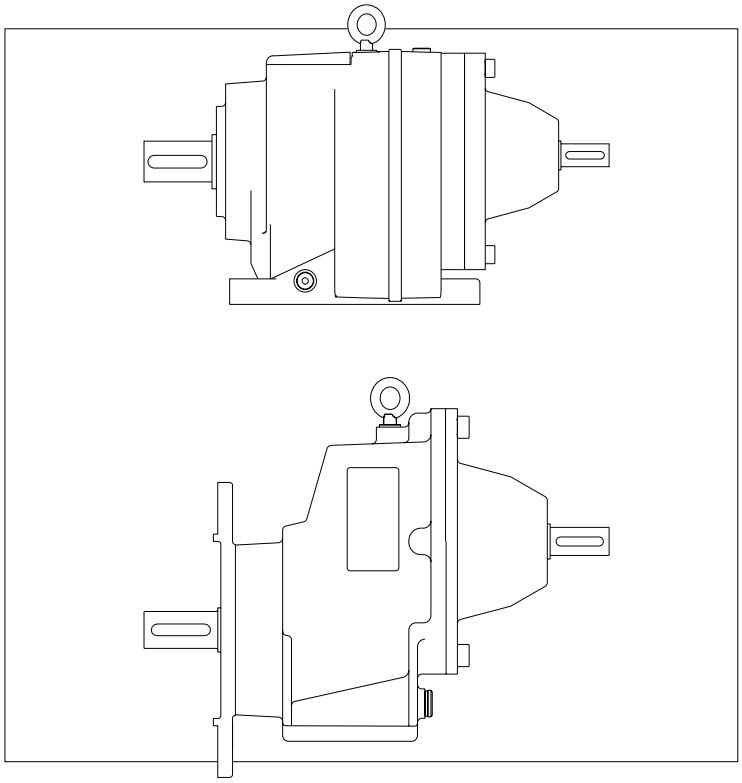

REDUCER

SERIES M

TEXTRON POWER TRANSMISSION

OVERHUNG & AXIAL LOADS (NEWTONS) ON SHAFTS

0107

Maximum permissible overhung loads

When a sprocket, gear etc. is mounted on the shaft a calculation, as below, must be made to determine the overhung load on the shaft, and the results compared to the maximum permissible overhung loads tabulated. Overhung loads can be reduced by increasing the diameter of the sprocket, gear, etc. If the maximum permissible overhung load is exceeded, the sprocket, gear, etc. should be mounted on a separate shaft, flexibly coupled and supported in its own bearings, or the gear unit shaft should be extended to run in an outboard bearing. Alternatively, a larger gear is often a less expensive solution.

Permissible overhung loads vary according to the direction of rotation. The values tabulated are for the most unfavourable direction with the unit transmitting full rated power and the load P applied midway along the shaft extension. Hence they can sometimes be increased for a more favourable direction of rotation, or if the power transmitted is less than the rated capacity of the gear unit, or if the load is applied nearer to the gear unit case. Refer to Textron Power Transmission for further details. In any event, the sprocket, gear etc. should be positioned as close as possible to the gear unit case in order to reduce bearing loads and shaft stresses, and to prolong life.

All units will accept 100% momentary overload on stated capacities.

Overhung load (Newtons)

$$P = \frac{kW \times 9{,}500{,}000 \times K}{N \times R}$$

where

P	=	equivalent overhung load (Newtons)
kW	=	power transmitted by the shaft (kilowatts)
N	=	speed of shaft (rev/min)
R	=	pitch radius of sprocket, etc. (mm)
K	=	factor

Note: 1 Newton = 0.101972 kp = 0.227809 lbf.

Overhung member	K (factor)
Chain sprocket*	1.00
Spur or helical pinion	1.25
Vee belt sheave	1.50
Flat belt pulley	2.00

* If multistrand chain drives are equally loaded and the outer strand is further than dimension Fra output or Frb input, refer to Textron Power Transmission.

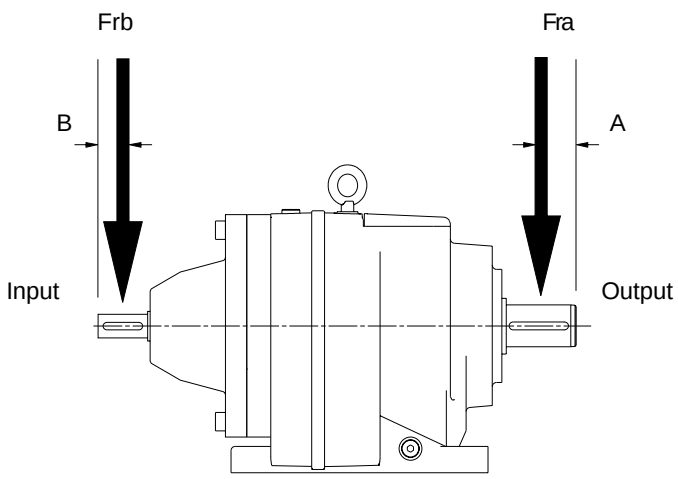

Distance midway along the shaft extension

Size of unit	No. of Reductions	Dimension A (mm)	Dimension B (mm)
M01	2 - 3	20	20
M02	2 - 3	25	20
M03	2 - 5	25	20
M04	2 - 5	30	20
M05	1	20	20
	2 - 5	35	20
M06	1	25	20
	2 - 5	35	20
M07	1	30	25
	2	40	25
	3	40	20
	4 - 5	40	20
M08	1	40	30
	2	50	30
	3	50	25
	4 - 5	50	20
M09	2	60	40
	3	60	30
	4 - 5	60	20
M10	2	70	55
	3	70	40
	4 - 5	70	25
M13	2 - 3	85	55
	4	85	25
	5	85	20
M14	2 - 3	105	55
	4	105	25
	5	105	20

OVERHUNG & AXIAL LOADS (NEWTONS) ON SHAFTS

0203

Inputshaft Overhung Loads, Frb (Kn) 1450 rpm

Single Stage Units

Ratios	M05	M06	M07	M08
1.25 - 2.5	0.50	0.70	1.00	1.50
2.8 - 8.0	0.85	1.00	1.50	1.80

Two, Three, Four and Five Stage Units

	M01	M02	M03	M04	M05	M06	M07	M08	M09	M10	M13	M14
2 Stage	1.50	1.65	1.56	1.20	1.10	0.90	1.65	1.50	1.50	2.55	6.90	7.10
3 Stage	1.65	1.75	1.75	1.50	1.50	1.50	1.80	2.25	3.50	4.20	12.00	12.00
4 Stage	-	-	1.50	1.50	1.50	1.50	1.50	1.75	1.75	2.25	2.25	2.25
5 Stage	-	-	1.50	1.50	1.50	1.50	1.50	1.75	1.75	2.25	2.25	2.25

For output overhung load Fra consult ratings tables pages 23 to 80

Axial Thrust Capacities (Newtons)

No check or calculation is required for axial loads (F_A) towards or away from the unit up to 50% of the permissible overhung load. If the axial thrust considerably exceeds these values or if there is a combination of axial thrust loads and overhung loads please contact Textron Power Transmission.

SINGLE REDUCTION RATINGS

0106

Note: Input Power, Pm may exceed thermal limit,
Check thermal power page 118

Pm	-	Input Power	(kW)
M2	-	Output Torque	(Nm)
i	-	Exact Ratio	(:1)
N2	-	Output Speed	(rpm)
fra	-	Overhung Load	(kN)

SINGLE REDUCTION

Column Entry 6 7 8	Input Speed N1 (rpm)	M0512					M0612					M0712					M0812				
		N2 (rpm)	i (:1)	M2 (Nm)	Pm (kW)	fra (kN)	N2 (rpm)	i (:1)	M2 (Nm)	Pm (kW)	fra (kN)	N2 (rpm)	i (:1)	M2 (Nm)	Pm (kW)	fra (kN)	N2 (rpm)	i (:1)	M2 (Nm)	Pm (kW)	fra (kN)
1.2	2900	2333	1.243	38	9.31	1.67	2310	1.255	76	18.6	3.21	2300	1.261	107	26.1	3.92	2311	1.255	168	41.3	5.05
	1450	1166		48	5.87	2.03	1155		93	11.4	3.96	1150		107	13.1	5.15	1155		169	20.7	6.12
	960	772		51	4.2	2.32	765		93	7.54	4.00	761		107	8.65	6.01	765		169	13.7	7.16
	725	583		51	3.17	2.50	578		93	5.69	4.00	575		107	6.53	6.20	578		169	10.3	7.25
1.4	2900	2054	1.412	39	8.57	1.72	2058	1.409	80	17.5	3.32	2092	1.386	118	26.1	4.00	2078	1.396	184	40.6	5.18
	1450	1027		50	5.4	2.13	1029		94	10.2	4.00	1046		118	13.1	5.27	1039		188	20.7	6.24
	960	680		52	3.72	2.41	681		94	6.74	4.00	692		118	8.65	6.15	688		188	13.7	7.31
	725	514		52	2.81	2.65	515		94	5.09	4.00	523		118	6.53	6.30	519		188	10.3	7.50
1.8	2900	1617	1.793	43	7.33	1.83	1621	1.789	88	15.2	3.51	1601	1.811	140	23.8	4.30	1607	1.805	205	34.9	5.45
	1450	809		52	4.47	2.37	810		112	9.58	4.00	801		154	13.1	5.48	803		243	20.7	6.48
	960	535		52	2.96	2.57	536		115	6.51	4.00	530		154	8.65	6.29	532		243	13.7	7.58
	725	404		52	2.23	2.90	405		115	4.92	4.00	400		154	6.53	6.40	402		243	10.3	7.60
2.0	2900	1424	2.037	45	6.86	1.92	1430	2.029	93	14	3.72	1409	2.059	147	22	4.47	1431	2.026	214	32.5	5.70
	1450	712		52	3.94	2.48	715		117	8.85	4.00	704		175	13.1	5.58	716		270	20.5	6.59
	960	471		52	2.6	2.68	473		118	5.88	4.00	466		175	8.65	6.24	474		273	13.7	7.52
	725	356		52	1.97	2.95	357		118	4.44	4.00	352		176	6.53	6.40	358		273	10.3	7.60
2.5	2900	1160	2.5	50	6.14	2.03	1199	2.419	98	12.5	3.90	1160	2.5	159	19.5	5.15	1167	2.485	229	28.4	6.12
	1450	580		52	3.21	2.65	599		119	7.53	4.00	580		185	11.4	6.00	584		289	17.9	7.09
	960	384		52	2.12	2.91	397		119	4.98	4.00	384		186	7.54	6.40	386		332	13.6	7.36
	725	290		52	1.6	3.10	300		119	3.76	4.00	290		186	5.69	6.40	292		335	10.3	7.70
2.8	2900	1046	2.773	51	5.63	2.20	1041	2.786	96	10.6	4.00	1055	2.75	163	18.3	5.27	1036	2.8	235	25.8	6.24
	1450	523		52	2.89	2.70	521		96	5.31	4.00	527		193	10.8	6.06	518		297	16.3	7.29
	960	346		52	1.92	2.92	345		96	3.52	4.00	349		193	7.14	6.40	343		341	12.4	7.47
	725	261		52	1.45	3.10	260		96	2.66	4.00	264		193	5.39	6.40	259		374	10.2	8.00
3.2	2900	921	3.15	52	5.1	2.30	895	3.24	107	10.1	4.00	918	3.16	168	16.3	5.31	890	3.259	247	23.3	6.30
	1450	460		52	2.55	2.79	448		109	5.16	4.00	459		209	10.2	6.05	445		312	14.7	7.46
	960	305		52	1.69	3.09	296		109	3.42	4.00	304		209	6.74	6.40	295		358	11.2	7.71
	725	230		52	1.27	3.10	224		109	2.58	4.00	229		209	5.09	6.40	222		391	9.2	8.00
3.6	2900	810	3.579	49	4.22	2.37	800	3.625	110	9.37	4.00	809	3.583	176	15.1	5.50	802	3.615	254	21.7	6.48
	1450	405		49	2.11	3.03	400		115	4.86	4.00	405		221	9.48	6.10	401		314	13.4	7.93
	960	268		49	1.4	3.10	265		115	3.22	4.00	268		221	6.27	6.40	266		314	8.85	8.00
	725	203		49	1.06	3.10	200		115	2.43	4.00	202		221	4.74	6.40	201		314	6.68	8.00
4.0	2900	736	3.941	49	3.83	2.40	751	3.864	112	8.96	4.00	734	3.952	177	13.8	5.54	733	3.957	256	19.9	6.59
	1450	368		49	1.91	3.01	375		118	4.71	4.00	367		221	8.59	6.27	366		301	11.7	7.85
	960	244		49	1.27	3.10	248		118	3.12	4.00	243		221	5.69	6.40	243		301	7.74	8.00
	725	184		49	0.96	3.10	188		118	2.35	4.00	183		221	4.29	6.40	183		301	5.85	8.00
4.5	2900	640	4.533	51	3.49	2.41	633	4.579	115	7.75	4.00	641	4.526	184	12.5	5.70	648	4.476	265	18.3	6.70
	1450	320		51	1.75	3.10	317		119	3.99	4.00	320		221	7.51	6.40	324		323	11.1	7.92
	960	212		51	1.16	3.10	210		119	2.64	4.00	212		221	4.97	6.40	214		323	7.34	8.00
	725	160		51	0.87	3.10	158		119	1.99	4.00	160		221	3.75	6.40	162		323	5.54	8.00
5.0	2900	588	4.929	48	3.04	2.65	593	4.889	117	7.35	4.00	567	5.118	186	11.2	6.00	574	5.053	271	16.6	7.10
	1450	294		48	1.52	3.10	297		119	3.74	4.00	283		221	6.64	6.40	287		339	10.3	8.00
	960	195		48	1.01	3.10	196		119	2.47	4.00	188		221	4.4	6.40	190		339	6.84	8.00
	725	147		49	0.76	3.10	148		119	1.87	4.00	142		221	3.32	6.40	143		339	5.16	8.00
6.0	2900	490	5.917	51	2.67	2.70	478	6.067	119	6.04	4.00	489	5.933	191	9.92	3.71	473	6.125	277	14	7.50
	1450	245		51	1.34	3.10	239		119	3.02	4.00	244		221	5.74	6.40	237		350	8.8	8.00
	960	162		51	0.88	3.10	158		119	2	4.00	162		221	3.8	6.40	157		368	6.13	8.00
	725	123		51	0.67	3.10	120		119	1.51	4.00	122		221	2.87	6.40	118		369	4.63	8.00
7.1	2900	408	7.1	52	2.28	3.00	405	7.154	119	5.13	4.00	410	7.077	198	8.62	4.01	406	7.143	283	12.2	7.90
	1450	204		52	1.14	3.10	203		119	2.56	4.00	205		221	4.82	6.40	203		357	7.72	8.00
	960	135		52	0.75	3.10	134		119	1.7	4.00	136		221	3.19	6.40	134		391	5.59	8.00
	725	102		52	0.57	3.10	101		119	1.28	4.00	102		221	2.41	6.40	102		391	4.22	8.00
8.0	2900	362	8	52	2.02	3.01	370	7.833	119	4.69	4.00	374	7.75	200	7.97	4.34	370	7.846	289	11.4	8.00
	1450	181		52	1.01	3.10	185		119	2.34	4.00	187		221	4.4	6.40	185		365	7.18	8.00
	960	120		52	0.67	3.10	123		119	1.55	4.00	124		221	2.91	6.40	122		391	5.09	8.00
	725	91		52	0.5	3.10	93		119	1.17	4.00	94		221	2.2	6.40	92		391	3.84	8.00

DOUBLE REDUCTION RATINGS
SIZES M01 - M04

0105

Pm	-	Input Power	(kW)	*N2*	-	Output Speed	(rpm)
M2	-	Output Torque	(Nm)	fra	-	Overhung Load	(kN)
i	-	Exact Ratio	(:1)				

DOUBLE REDUCTION

Column Entry	Input Speed	M0122					M0222					M0322					M0422				
6 7 8	N1 (rpm)	N2 (rpm)	i (:1)	M2 (Nm)	Pm (kW)	fra (kN)	N2 (rpm)	i (:1)	M2 (Nm)	Pm (kW)	fra (kN)	N2 (rpm)	i (:1)	M2 (Nm)	Pm (kW)	fra (kN)	N2 (rpm)	i (:1)	M2 (Nm)	Pm (kW)	fra (kN)
3 . 6	2900	773	3.75	47	3.97	0.98	808	3.589	79	7	3.00	808	3.589	96	8.45	2.05	809	3.585	161	14.2	2.05
	1450	387		59	2.49	0.98	404		100	4.39	3.10	404		118	5.18	2.30	404		203	8.87	2.30
	960	256		68	1.89	0.98	268		115	3.33	3.10	268		134	3.88	2.30	268		233	6.72	2.60
	725	193		73	1.53	0.98	202		126	2.74	3.10	202		146	3.18	2.30	202		256	5.57	3.45
5 . 0	2900	572	5.066	54	3.34	0.98	576	5.034	92	5.76	3.00	576	5.034	110	6.87	2.05	575	5.04	188	11.8	2.05
	1450	286		68	2.09	0.98	288		116	3.61	3.10	288		135	4.22	2.30	288		237	7.37	2.45
	960	190		76	1.55	0.98	191		131	2.7	3.10	191		153	3.16	2.30	190		272	5.59	3.20
	725	143		79	1.22	1.00	144		137	2.13	3.15	144		167	2.59	2.30	144		290	4.49	4.60
5 . 6	2900	503	5.762	57	3.1	0.98	523	5.547	96	5.44	3.05	523	5.547	114	6.47	2.05	513	5.649	198	11	2.05
	1450	252		71	1.95	0.98	261		121	3.41	3.10	261		140	3.97	2.30	257		249	6.91	2.60
	960	167		78	1.41	1.00	173		134	2.5	3.10	173		159	2.97	2.30	170		286	5.23	3.40
	725	126		82	1.11	1.02	131		140	1.97	3.15	131		173	2.44	2.30	128		298	4.12	4.70
6 . 3	2900	444	6.528	60	2.87	0.98	460	6.299	101	5.04	3.05	460	6.299	120	5.98	2.10	457	6.341	208	10.3	2.10
	1450	222		75	1.8	0.98	230		127	3.16	3.10	230		147	3.67	2.30	229		262	6.46	2.90
	960	147		80	1.27	1.00	152		138	2.27	3.10	152		167	2.74	2.32	151		294	4.79	4.60
	725	111		84	1.01	1.04	115		145	1.8	3.20	115		182	2.25	2.35	114		307	3.78	4.75
8 . 0	2900	347	8.348	66	2.48	0.98	362	8	111	4.36	3.10	362	8	130	5.13	2.10	360	8.053	229	8.94	2.30
	1450	174		79	1.49	0.98	181		136	2.67	3.10	181		161	3.15	2.30	180		289	5.61	3.45
	960	115		85	1.06	1.04	120		145	1.88	3.25	120		182	2.36	2.35	119		310	3.99	4.70
	725	87		90	0.84	1.18	91		154	1.51	3.50	91		198	1.93	2.40	90		326	3.16	5.10
9 . 0	2900	322	8.997	67	2.36	0.98	319	9.088	116	4.02	3.10	319	9.088	136	4.71	2.10	318	9.129	241	8.29	2.40
	1450	161		80	1.4	1.00	160		140	2.41	3.10	160		168	2.89	2.30	159		299	5.13	4.60
	960	107		87	1	1.09	106		150	1.71	3.40	106		190	2.17	2.35	105		319	3.61	4.85
	725	81		90	0.78	1.30	80		159	1.37	3.90	80		207	1.78	2.50	79		338	2.89	6.00
1 1 .	2900	255	11.359	74	2.04	0.98	260	11.154	125	3.53	3.10	260	11.154	146	4.11	2.10	266	10.887	258	7.44	2.60
	1450	128		84	1.16	1.02	130		145	2.04	3.15	130		179	2.52	2.30	133		311	4.46	4.70
	960	85		90	0.82	1.30	86		158	1.46	3.55	86		203	1.89	2.40	88		333	3.17	5.55
	725	64		90	0.62	1.45	65		160	1.12	4.00	65		209	1.47	2.75	67		338	2.42	6.40
1 2 .	2900	225	12.877	77	1.89	0.98	234	12.371	130	3.31	3.10	234	12.371	151	3.84	2.15	231	12.536	272	6.82	2.90
	1450	113		87	1.06	1.04	117		148	1.88	3.20	117		186	2.36	2.35	116		320	3.99	4.75
	960	75		90	0.72	1.40	78		160	1.34	3.70	78		209	1.75	2.55	77		338	2.79	6.00
	725	56		90	0.55	1.50	59		160	1.01	4.00	59		209	1.32	2.80	58		338	2.11	6.40
1 4 .	2900	197	14.715	80	1.7	0.98	206	14.054	136	3.05	3.10	206	14.054	158	3.52	2.15	199	14.58	288	6.2	3.10
	1450	99		90	0.96	1.09	103		153	1.71	3.30	103		194	2.16	2.35	99		329	3.53	4.85
	960	65		90	0.63	1.40	68		160	1.18	3.85	68		209	1.54	2.75	66		338	2.4	6.40
	725	49		90	0.48	1.50	52		160	0.89	4.00	52		209	1.16	2.85	50		338	1.81	6.70
1 6 .	2900	177	16.369	81	1.56	0.98	182	15.968	141	2.79	3.10	182	15.968	166	3.28	2.15	178	16.312	304	5.86	3.50
	1450	89		90	0.86	1.18	91		160	1.57	3.50	91		205	2.02	2.40	89		338	3.25	5.10
	960	59		90	0.57	1.45	60		160	1.04	4.00	60		209	1.36	2.80	59		338	2.15	6.50
	725	44		90	0.43	1.50	45		160	0.79	4.00	45		209	1.03	2.90	44		338	1.62	7.10
1 8 .	2900	161	18.047	83	1.44	1.00	165	17.584	142	2.54	3.10	165	17.584	169	3.03	2.30	167	17.386	306	5.52	4.50
	1450	80		90	0.78	1.35	82		160	1.43	3.90	82		208	1.86	2.45	83		338	3.04	5.55
	960	53		90	0.52	1.48	55		160	0.94	4.00	55		209	1.23	2.80	55		338	2.01	6.70
	725	40		90	0.39	1.60	41		160	0.71	4.00	41		209	0.93	3.05	42		338	1.52	7.20
2 0 .	2900	146	19.861	84	1.33	1.00	143	20.226	145	2.26	3.15	143	20.226	177	2.76	2.30	141	20.605	315	4.81	4.60
	1450	73		90	0.71	1.40	72		160	1.24	3.95	72		209	1.62	2.60	70		338	2.57	6.00
	960	48		90	0.47	1.50	47		160	0.82	4.00	47		209	1.07	2.90	47		338	1.7	7.10
	725	37		90	0.35	1.60	36		160	0.62	4.00	36		209	0.81	3.10	35		338	1.28	7.20
2 2 .	2900	125	23.269	86	1.17	1.02	132	21.989	147	2.11	3.15	132	21.989	182	2.61	2.30	132	22	319	4.56	4.70
	1450	62		90	0.61	1.45	66		160	1.14	4.00	66		209	1.49	2.75	66		338	2.41	6.40
	960	41		90	0.4	1.55	44		160	0.76	4.00	44		209	0.99	3.05	44		338	1.59	7.10
	725	31		90	0.3	1.90	33		160	0.57	4.00	33		209	0.75	3.10	33		338	1.2	7.20
2 8 .	2900	104	27.917	90	1.01	1.05	110	26.397	153	1.83	3.20	110	26.397	193	2.3	2.35	106	27.3	331	3.82	4.80
	1450	52		90	0.51	1.48	55		160	0.95	4.00	55		209	1.25	2.80	53		338	1.94	6.70
	960	34		90	0.34	1.60	36		160	0.63	4.00	36		209	0.82	3.10	35		338	1.29	7.20
	725	26		90	0.25	1.90	27		160	0.48	4.00	27		209	0.62	3.15	27		338	0.97	7.20
3 2 .	2900	89	32.542	90	0.87	1.18	92	31.677	160	1.59	3.50	92	31.677	205	2.04	2.40	90	32.192	338	3.31	5.10
	1450	45		90	0.44	1.50	46		160	0.8	4.00	46		209	1.04	2.90	45		338	1.65	7.10
	960	30		90	0.29	1.90	30		160	0.53	4.00	30		209	0.69	3.10	30		338	1.09	7.20
	725	22		90	0.22	1.90	23		160	0.4	4.00	23		209	0.52	3.15	23		338	0.82	7.20
3 6 .	2900	80	36.157	90	0.79	1.35	81	35.692	160	1.42	3.90	81	35.692	209	1.85	2.45	82	35.25	338	3.02	8.55
	1450	40		90	0.39	1.60	41		160	0.71	4.00	41		209	0.92	3.05	41		338	1.51	7.20
	960	27		90	0.26	1.90	27		160	0.47	4.00	27		209	0.61	3.15	27		338	1	7.20
	725	20		90	0.2	1.90	20		160	0.35	4.00	20		209	0.46	3.15	21		338	0.75	7.20
4 5 .	2900	67	43.542	84	0.61	1.45	70	41.492	160	1.22	4.00	70	41.492	188	1.43	2.60	67	43.2	338	2.47	6.40
	1450	33		84	0.3	1.90	35		160	0.61	4.00	35		199	0.75	3.10	34		338	1.23	7.20
	960	22		84	0.2	1.90	23		160	0.4	4.00	23		206	0.52	3.15	22		338	0.82	7.20
	725	17		84	0.15	1.90	17		160	0.3	4.00	17		209	0.4	3.15	17		338	0.62	7.20
5 0 .	2900	58	49.907	72	0.46	1.48	62	47.094	160	1.07	4.00	62	47.094	192	1.29	2.75	60	48.15	338	2.22	6.50
	1450	29		72	0.23	1.90	31		160	0.54	4.00	31		203	0.68	3.10	30		338	1.11	7.20
	960	19		72	0.15	1.90	20		160	0.35	4.00	20		208	0.46	3.15	20		338	0.73	7.20
	725	15		72	0.11	1.90	15		160	0.27	4.00	15		208	0.35	3.15	15		338	0.55	7.20
5 6 .	2900	51	56.719	71	0.4	1.50	54	53.538	160	0.95	4.00	54	53.538	205	1.21	2.80	54	54	269	1.58	6.70
	1450	26		71	0.2	1.90	27		160	0.47	4.00	27		206	0.61	3.15	27		270	0.79	7.20
	960	17		71	0.13	1.90	18		160	0.31	4.00	18		206	0.4	3.15	18		270	0.52	7.20
	725	13		71	0.1	1.90	14		160	0.24	4.00	14		206	0.3	3.15	13		270	0.4	7.20

SERIES M

DOUBLE REDUCTION RATINGS
SIZES M05 - M08

0105

Pm - Input Power (kW) *N2* - Output Speed (rpm)
M2 - Output Torque (Nm) fra - Overhung Load (kN)
i - Exact Ratio (:1)

DOUBLE REDUCTION

Column Entry 6 7 8	Input Speed N1 (rpm)	M0522					M0622					M0722					M0822				
		N2 (rpm)	i (:1)	M2 (Nm)	Pm (kW)	fra (kN)	N2 (rpm)	i (:1)	M2 (Nm)	Pm (kW)	fra (kN)	N2 (rpm)	i (:1)	M2 (Nm)	Pm (kW)	fra (kN)	N2 (rpm)	i (:1)	M2 (Nm)	Pm (kW)	fra (kN)
3 . 6	2900	809	3.585	263	23.1	2.80						789	3.678	304	26.1	3.50	788	3.678	479	41.3	5.50
	1450	404		292	12.8	2.80						394		306	13.1	3.50	394		483	20.7	6.20
	960	268		293	8.44	2.80						261		307	8.65	3.50	261		484	13.7	6.25
	725	202		293	6.38	2.80						197		307	6.53	3.50	197		485	10.3	6.36
5 . 0	2900	575	5.04	317	19.7	2.80	653	4.438	326	23.1	4.00	569	5.094	423	26.1	3.50	556	5.214	683	41.3	5.60
	1450	288		382	11.8	2.80	327		362	12.8	4.35	285		425	13.1	3.50	278		686	20.7	6.20
	960	190		383	7.84	2.80	216		363	8.44	4.45	188		425	8.65	3.50	184		688	13.7	6.35
	725	144		383	5.92	2.85	163		363	6.38	4.50	142		426	6.53	3.50	139		688	10.3	6.50
5 . 6	2900	513	5.649	336	18.6	2.80	465	6.24	393	19.7	4.10	507	5.722	447	24.5	3.50	501	5.792	760	41.3	5.80
	1450	257		409	11.3	2.80	232		473	11.8	4.45	253		477	13.1	3.50	250		763	20.7	6.25
	960	170		412	7.54	2.80	154		474	7.84	4.50	168		478	8.65	3.50	166		764	13.7	6.40
	725	128		413	5.69	2.85	116		474	5.92	5.00	127		478	6.53	3.50	125		765	10.3	6.60
6 . 3	2900	457	6.341	354	17.5	2.80	415	6.994	416	18.6	4.20	461	6.292	464	23.2	3.50	450	6.442	832	40.6	6.00
	1450	229		413	10.2	2.85	207		510	11.4	4.45	230		525	13.1	3.50	225		849	20.7	6.30
	960	151		413	6.74	2.90	137		511	7.54	4.60	153		526	8.65	3.50	149		851	13.7	6.50
	725	114		414	5.09	2.90	104		511	5.69	5.20	115		526	6.53	3.50	113		851	10.3	6.70
8 . 0	2900	360	8.053	381	14.8	2.80	369	7.851	438	17.5	4.30	353	8.218	519	19.9	3.50	348	8.33	926	34.9	6.20
	1450	180		441	8.55	2.85	185		512	10.2	4.45	176		655	12.5	3.50	174		1100	20.7	6.35
	960	119		450	5.77	2.90	122		512	6.74	4.70	117		687	8.65	3.50	115		1100	13.7	6.70
	725	90		450	4.36	2.95	92		512	5.09	5.20	88		687	6.53	3.60	87		1100	10.3	7.25
9 . 0	2900	318	9.129	391	13.4	2.80	291	9.97	484	15.2	4.35	310	9.344	547	18.4	3.50	310	9.352	967	32.5	6.20
	1450	159		450	7.69	2.90	145		594	9.3	4.50	155		689	11.5	3.50	155		1220	20.5	6.50
	960	105		450	5.09	2.95	96		594	6.15	5.20	103		743	8.24	3.50	103		1240	13.7	7.10
	725	79		450	3.84	3.00	73		594	4.64	6.50	78		780	6.52	3.70	78		1240	10.3	8.00
1 1 .	2900	266	10.887	406	11.7	2.80	257	11.302	507	14	4.45	256	11.346	589	16.3	3.50	253	11.469	1040	28.4	6.20
	1450	133		450	6.45	2.90	128		604	8.34	4.70	128		726	10	3.50	126		1310	17.9	6.60
	960	88		450	4.27	2.95	85		607	5.55	5.85	85		773	7.06	3.60	84		1500	13.6	7.50
	725	67		450	3.22	4.00	64		607	4.19	7.20	64		811	5.59	4.25	63		1520	10.3	9.00
1 2 .	2900	231	12.536	418	10.5	2.85	215	13.479	538	12.5	4.45	232	12.481	611	15.4	3.50	224	12.923	1060	25.8	6.30
	1450	116		426	5.31	2.90	108		613	7.11	5.20	116		740	9.28	3.60	112		1340	16.3	6.90
	960	77		427	3.52	3.25	71		625	4.79	6.50	77		793	6.58	3.70	74		1540	12.4	8.50
	725	58		427	2.66	4.20	54		625	3.62	7.20	58		819	5.13	4.20	56		1690	10.2	9.00
1 4 .	2900	199	14.58	432	9.28	2.85	187	15.52	527	10.6	4.45	202	14.342	644	14.1	3.50	193	15.043	1120	23.3	6.30
	1450	99		450	4.82	2.95	93		528	5.31	5.20	101		761	8.31	3.60	96		1410	14.7	6.90
	960	66		450	3.19	4.00	62		528	3.52	7.20	67		808	5.84	4.00	64		1620	11.2	9.00
	725	50		450	2.41	4.25	47		528	2.66	7.20	51		830	4.53	4.50	48		1700	8.82	9.50
1 6 .	2900	178	16.312	442	8.5	2.85	161	18.051	584	10.1	4.50	178	16.263	684	13.2	3.50	174	16.686	1150	21.7	6.38
	1450	89		450	4.32	2.95	80		596	5.16	5.85	89		786	7.58	3.50	87		1420	13.4	7.25
	960	59		450	2.86	4.10	53		597	3.42	7.20	59		818	5.22	4.20	58		1420	8.85	9.00
	725	44		450	2.16	4.50	40		597	2.58	7.20	45		841	4.05	4.65	43		1420	6.68	9.50
1 8 .	2900	167	17.386	448	8.08	2.90	144	20.196	598	9.28	4.50	162	17.938	700	12.3	3.50	159	18.261	1160	19.9	6.50
	1450	83		450	4.05	3.00	72		626	4.85	6.50	81		794	6.93	3.60	79		1360	11.7	8.00
	960	55		450	2.68	4.20	48		626	3.21	7.20	54		826	4.77	4.50	53		1360	7.74	9.25
	725	42		450	2.02	4.50	36		626	2.42	7.20	40		849	3.71	5.10	40		1360	5.85	10.00
2 0 .	2900	141	20.605	450	6.85	2.90	135	21.526	601	8.75	4.60	141	20.543	731	11.2	3.50	140	20.659	1200	18.3	6.50
	1450	70		450	3.42	3.50	67		626	4.55	7.20	71		804	6.14	3.90	70		1460	11.1	8.50
	960	47		450	2.26	4.50	45		626	3.01	7.20	47		837	4.23	4.60	46		1460	7.34	9.50
	725	35		450	1.71	5.60	34		626	2.27	7.20	35		861	3.28	6.25	35		1460	5.54	12.30
2 2 .	2900	132	22	450	6.41	2.90	114	25.511	610	7.5	4.90	125	23.226	748	10.1	3.50	124	23.32	1230	16.6	6.60
	1450	66		450	3.2	4.00	57		626	3.84	7.20	62		813	5.5	4.20	62		1540	10.3	9.00
	960	44		450	2.12	4.50	38		626	2.54	7.20	41		847	3.79	5.10	41		1540	6.84	10.00
	725	33		450	1.6	6.30	28		626	1.92	7.20	31		867	2.93	7.40	31		1540	5.16	12.30
2 8 .	2900	106	27.3	450	5.17	2.90	106	27.238	614	7.07	5.20	108	26.928	768	8.97	3.50	103	28.269	1260	14	6.90
	1450	53		450	2.58	4.25	53		626	3.6	7.20	54		825	4.81	4.50	51		1580	8.8	9.25
	960	35		450	1.71	5.60	35		626	2.38	7.20	36		860	3.32	6.25	34		1670	6.13	12.30
	725	27		450	1.29	7.20	27		626	1.8	7.20	27		867	2.53	8.00	26		1670	4.63	14.00
3 2 .	2900	90	32.192	450	4.39	2.95	86	33.8	626	5.81	5.80	90	32.118	786	7.7	3.50	88	32.967	1280	12.2	7.25
	1450	45		450	2.19	4.50	43		626	2.9	7.20	45		840	4.11	4.65	44		1620	7.72	9.50
	960	30		450	1.45	6.30	28		626	1.92	7.20	30		867	2.81	7.40	29		1700	5.36	13.50
	725	23		450	1.1	7.20	21		626	1.45	7.20	23		868	2.12	9.20	22		1700	4.04	16.20
3 6 .	2900	82	35.25	450	4.02	3.00	73	39.857	626	4.93	6.50	82	35.173	792	7.1	3.60	80	36.213	1310	11.4	8.00
	1450	41		450	2.01	5.00	36		626	2.47	7.20	41		847	3.79	5.10	40		1650	7.18	10.00
	960	27		450	1.33	7.20	24		626	1.63	7.20	27		867	2.57	8.00	27		1700	4.88	14.00
	725	21		450	1	7.20	18		626	1.23	7.20	21		868	1.94	9.20	20		1700	3.69	16.20
4 5 .	2900	67	43.2	415	3.03	4.00	66	43.643	626	4.51	7.20	69	42.208	806	6.03	3.90	65	44.379	1340	9.51	9.00
	1450	34		424	1.55	5.60	33		626	2.25	7.20	34		863	3.23	6.25	33		1690	5.99	12.30
	960	22		439	1.06	7.20	22		626	1.49	7.20	23		868	2.15	9.20	22		1700	3.98	16.20
	725	17		450	0.82	7.20	17		626	1.13	7.20	17		868	1.62	9.20	16		1700	3.01	16.20
5 0 .	2900	60	48.15	379	2.48	4.00	54	53.486	514	3.03	7.20	60	48.562	700	4.56	4.20	60	48.462	1350	8.79	9.20
	1450	30		379	1.24	6.30	27		526	1.55	7.20	30		700	2.28	7.40	30		1690	5.48	13.50
	960	20		379	0.82	7.20	18		544	1.06	7.20	20		701	1.51	9.20	20		1700	3.65	16.20
	725	15		379	0.62	7.20	14		557	0.82	7.20	15		701	1.14	9.20	15		1700	2.76	16.20
5 6 .	2900	54	54	269	1.58	4.25	49	59.614	469	2.48	7.20	54	53.957	595	3.49	4.50	52	55.804	1360	7.72	9.25
	1450	27		270	0.79	7.20	24		470	1.24	7.20	27		596	1.75	9.20	26		1540	4.36	16.20
	960	18		270	0.52	7.20	16		470	0.82	7.20	18		596	1.16	9.20	17		1550	2.91	16.20
	725	13		270	0.4	7.20	12		470	0.62	7.20	13		596	0.87	9.20	13		1550	2.19	16.20
6 3 .	2900						43	66.857	334	1.58	7.20										
	1450						22		334	0.79	7.20										
	960						14		334	0.52	7.20										
	725						11		334	0.4	7.20										

DOUBLE REDUCTION RATINGS
SIZES M09 - M14

0102

Note: Input Power, Pm may exceed thermal limit, Check thermal power page 118

Pm - Input Power (kW)
M2 - Output Torque (Nm)
i - Exact Ratio (:1)
N2 - Output Speed (rpm)
fra - Overhung Load (kN)

DOUBLE REDUCTION

Column Entry	Input Speed	M0921					M1021					M1321					M1421				
6 7 8	N1 (rpm)	N2 (rpm)	i (:1)	M2 (Nm)	Pm (kW)	fra (kN)	N2 (rpm)	i (:1)	M2 (Nm)	Pm (kW)	fra (kN)	N2 (rpm)	i (:1)	M2 (Nm)	Pm (kW)	fra (kN)	N2 (rpm)	i (:1)	M2 (Nm)	Pm (kW)	fra (kN)
1 . 4	2900	1961	1.479	452	96.1	10.0	2011	1.442	719	156	12.0										
	1450	980		574	60.6	10.0	1005		722	78.2	12.0										
	960	649		661	46	10.1	666		722	51.8	12.2										
	725	490		727	38.2	10.1	503		723	39.1	12.2										
1 . 8	2900	1424	2.036	534	82.2	10.0	1439	2.015	1010	156	12.0										
	1450	712		677	51.8	10.1	720		1010	78.2	12.2										
	960	471		779	39.3	10.1	476		1010	51.8	12.2										
	725	356		856	32.6	10.2	360		1010	39.1	12.3										
2 . 2	2900	1271	2.282	565	77.5	10.0	1323	2.191	1100	156	12.0										
	1450	635		716	48.8	10.1	662		1100	78.2	12.2										
	960	421		824	37.1	10.2	438		1100	51.8	12.3										
	725	318		906	30.8	10.2	331		1100	39.1	12.3										
2 . 5	2900	1132	2.562	596	72.9	10.0	1165	2.489	1170	147	12.0										
	1450	566		756	45.9	10.1	583		1250	78.2	12.2										
	960	375		869	34.9	10.2	386		1250	51.8	12.3										
	725	283		956	28.9	10.4	291		1250	39.1	12.4										
2 . 8	2900	977	2.969	909	96.1	10.0	969	2.992	1490	156	12.0	999	2.904	1810	195	28.0	1004	2.888	2520	274	35.0
	1450	488		1150	60.6	10.1	485		1490	78.2	12.2	499		1810	97.4	28.7	502		2520	137	36.0
	960	323		1320	46	10.2	321		1500	51.8	12.3	331		1810	64.5	29.5	332		2520	90.6	37.5
	725	244		1460	38.2	10.4	242		1500	39.1	12.4	250		1810	48.7	30.0	251		2520	68.5	38.0
3 . 2	2900	878	3.301	671	63.6	10.1	895	3.242	1310	126	12.2	909	3.189	1980	195	28.3	893	3.247	2840	274	35.5
	1450	439		850	40	10.2	447		1570	75.2	12.3	455		1990	97.4	29.2	447		2840	137	37.0
	960	291		978	30.4	10.4	296		1570	49.8	12.4	301		1990	64.5	30.0	296		2840	90.6	38.0
	725	220		1070	25.2	10.6	224		1570	37.6	12.4	227		1990	48.7	31.0	223		2840	68.5	39.0
3 . 6	2900	786	3.688	692	58.6	10.1	829	3.5	1330	118	12.2	797	3.638	2250	195	28.3	759	3.822	3320	274	35.5
	1450	393		876	36.9	10.2	414		1570	69.7	12.3	399		2260	97.4	29.2	379		3330	137	37.0
	960	260		1010	28.1	10.4	274		1570	46.1	12.4	264		2260	64.5	30.0	251		3330	90.6	38.0
	725	197		1090	22.8	10.6	207		1570	34.8	12.4	199		2260	48.7	31.0	190		3330	68.5	39.0
4 . 0	2900	709	4.088	1070	82.2	10.1	694	4.179	2090	156	12.2	720	4.025	2510	195	28.3	720	4.029	3520	274	35.5
	1450	355		1360	51.8	10.2	347		2090	78.2	12.3	360		2510	97.4	29.5	360		3530	137	37.5
	960	235		1560	39.3	10.6	230		2090	51.8	12.4	239		2510	64.5	31.0	238		3530	90.6	39.0
	725	177		1710	32.6	10.8	173		2100	39.1	12.5	180		2510	48.7	32.5	180		3530	68.5	40.0
4 . 5	2900	633	4.582	1130	77.5	10.1	638	4.545	2200	152	12.2	656	4.421	2760	195	28.3	639	4.537	3970	274	35.5
	1450	316		1440	48.8	10.2	319		2280	78.2	12.3	328		2760	97.4	29.5	320		3970	137	37.5
	960	210		1650	37.1	10.6	211		2280	51.8	12.4	217		2760	64.5	31.0	212		3970	90.6	39.0
	725	158		1810	30.8	10.8	160		2280	39.1	12.5	164		2760	48.7	32.5	160		3970	68.5	40.0
5 . 0	2900	572	5.073	1330	82.2	10.1	587	4.938	2260	144	12.2	575	5.042	3130	195	28.7	544	5.333	4650	274	36.0
	1450	286		1680	51.8	10.4	294		2470	78.2	12.4	288		3140	97.4	30.0	272		4660	137	38.0
	960	189		1930	39.3	10.8	194		2470	51.8	12.5	190		3140	64.5	32.5	180		4660	90.6	40.0
	725	143		2120	32.6	11.0	147		2470	39.1	12.5	144		3140	48.7	35.0	136		4660	68.5	41.0
5 . 6	2900	510	5.686	1410	77.5	10.1	540	5.37	2340	137	12.2	524	5.538	3440	195	28.7	483	6.005	5240	274	36.0
	1450	255		1780	48.8	10.4	270		2690	78.2	12.4	262		3450	97.4	30.0	241		5240	137	38.0
	960	169		2040	37.1	10.8	179		2690	51.8	12.5	173		3450	64.5	32.5	160		5240	90.6	40.0
	725	128		2250	30.7	11.0	135		2690	39.1	12.5	131		3450	48.7	35.0	121		5240	68.5	41.0
6 . 3	2900	438	6.628	1350	63.6	10.2	431	6.724	2550	119	12.3	467	6.21	3880	195	29.2	443	6.548	5730	274	37.0
	1450	219		1700	40	10.6	216		3140	72.9	12.4	234		3880	97.4	31.0	221		5730	137	39.0
	960	145		1960	30.4	11.0	143		3370	51.8	12.5	155		3880	64.5	35.0	147		5730	90.6	41.0
	725	109		2150	25.2	11.4	108		3370	39.1	13.0	117		3880	48.7	38.0	111		5730	68.5	43.0
7 . 1	2900	392	7.404	1390	58.6	10.2	399	7.26	2620	113	12.3	422	6.879	4300	195	29.2	399	7.27	6370	274	37.0
	1450	196		1760	36.9	10.6	200		3230	69.5	12.4	211		4300	97.4	31.0	199		6360	137	39.0
	960	130		2020	28.1	11.0	132		3640	51.8	12.5	140		4300	64.5	35.0	132		6360	90.6	41.0
	725	98		2220	23.3	11.4	100		3640	39.1	13.0	105		4300	48.7	38.0	100		6370	68.5	43.0
8 . 0	2900	353	8.224	1670	63.6	10.2	365	7.945	2700	107	12.3	373	7.779	4840	195	29.5	335	8.667	7570	274	37.5
	1450	176		2080	39.5	10.8	182		3330	65.5	12.5	186		4840	97.4	32.5	167		7570	137	40.0
	960	117		2360	29.6	11.4	121		3760	49	13.0	123		4840	64.5	38.0	111		7570	90.6	43.0
	725	88		2560	24.3	13.0	91		3980	39.1	15.0	93		4850	48.7	42.0	84		7570	68.5	46.0
9 . 0	2900	316	9.188	1720	58.6	10.2	338	8.578	2780	102	12.3	337	8.618	5110	186	29.5	301	9.623	8410	274	37.5
	1450	158		2170	36.8	10.8	169		3420	62.4	12.5	168		5360	97.4	32.5	151		8400	137	40.0
	960	104		2450	27.5	11.4	112		3870	46.7	13.0	111		5370	64.5	38.0	100		8400	90.6	43.0
	725	79		2670	22.6	13.0	85		4210	38.3	15.0	84		5370	48.7	42.0	75		8410	68.5	46.0
1 0 .	2900	282	10.266	1560	47.4	10.4	274	10.587	2990	88.3	12.4	293	9.891	5470	173	30.0	288	10.065	7980	248	38.0
	1450	141		1970	29.8	11.0	137		3680	54.2	12.5	147		6170	97.4	35.0	144		8800	137	41.0
	960	94		2260	22.7	13.0	91		3770	36.8	15.0	97		6180	64.5	42.0	95		8810	90.6	46.0
	725	71		2480	18.8	15.7	68		3770	27.8	15.9	73		6180	48.7	45.0	72		8810	68.5	52.0
1 1 .	2900	248	11.705	1610	43.1	10.4	242	11.984	3120	81.4	12.4	259	11.2	5900	165	30.0	254	11.429	8270	227	38.0
	1450	124		2040	27.1	11.0	121		3770	49.1	12.5	129		5940	82.7	35.0	127		9980	137	41.0
	960	82		2340	20.6	13.0	80		3770	32.5	15.0	86		5940	54.7	42.0	84		9990	90.6	46.0
	725	62		2570	17.1	15.7	60		3770	24.5	15.9	65		5940	41.3	45.0	63		9990	68.4	52.0

DOUBLE REDUCTION RATINGS
SIZES M09 - M14

0102

Pm - Input Power (kW) *N2* - Output Speed (rpm)
M2 - Output Torque (Nm) fra - Overhung Load (kN)
i - Exact Ratio (:1)

DOUBLE REDUCTION

Column Entry	Input Speed N1	M0921					M1021					M1321					M1421				
6 7 8	(rpm)	N2 (rpm)	i (:1)	M2 (Nm)	Pm (kW)	fra (kN)	N2 (rpm)	i (:1)	M2 (Nm)	Pm (kW)	fra (kN)	N2 (rpm)	i (:1)	M2 (Nm)	Pm (kW)	fra (kN)	N2 (rpm)	i (:1)	M2 (Nm)	Pm (kW)	fra (kN)
1 2 .	2900	228	12.739	1930	47.4	10.6	232	12.509	3160	79.1	12.4	234	12.391	5370	136	31.0	218	13.322	10200	241	39.0
	1450	114		2420	29.6	11.4	116		3890	48.6	13.0	117		6350	80.3	38.0	109		10200	121	43.0
	960	75		2740	22.2	13.0	77		4400	36.4	15.0	77		6350	53.2	42.0	72		10200	79.8	46.0
	725	57		2860	17.5	17.0	58		4410	27.5	23.0	59		6350	40.1	51.0	54		10200	60.2	60.0
1 4 .	2900	200	14.525	2000	43.1	10.6	205	14.161	3290	72.9	12.4	207	14.031	5880	131	31.0	192	15.127	10400	215	39.0
	1450	100		2530	27.1	11.4	102		4050	44.8	13.0	103		6290	70.3	38.0	96		10400	108	43.0
	960	66		2860	20.3	15.7	68		4410	32.2	15.9	68		6290	46.5	45.0	63		10400	71.3	52.0
	725	50		2860	15.3	17.0	51		4410	24.3	23.0	52		6290	35.1	51.0	48		10400	53.8	60.0
1 6 .	2900	175	16.591	1750	32.9	10.8	177	16.426	3460	65.9	12.5	182	15.969	6070	119	32.5	177	16.429	8970	172	40.0
	1450	87		2210	20.7	13.0	88		3770	35.9	15.0	91		6200	60.8	42.0	88		11100	106	46.0
	960	58		2530	15.7	17.0	58		3770	23.7	23.0	60		6200	40.2	51.0	58		11100	70.2	60.0
	725	44		2640	12.4	22.4	44		3770	17.9	28.0	45		6200	30.4	56.0	44		11100	53	70.0
1 8 .	2900	157	18.433	1760	29.9	10.8	159	18.253	3520	60.4	12.5	161	18	6200	108	32.5	160	18.112	9260	161	40.0
	1450	79		2230	18.9	13.0	79		3770	32.3	15.0	81		6200	53.9	42.0	80		11100	96.2	46.0
	960	52		2560	14.3	17.0	53		3770	21.4	23.0	53		6200	35.7	51.0	53		11100	63.7	60.0
	725	39		2640	11.2	22.4	40		3770	16.1	28.0	40		6200	26.9	56.0	40		11100	48.1	70.0
2 0 .	2900	141	20.588	2160	32.9	11.0	149	19.409	3650	58.9	12.5	145	20.005	5980	94.1	35.0	133	21.745	10600	153	41.0
	1450	70		2730	20.7	15.7	75		4410	35.6	15.9	72		6350	49.9	45.0	67		10600	76.7	52.0
	960	47		2860	14.3	22.4	49		4410	23.5	28.0	48		6350	33	56.0	44		10600	50.7	70.0
	725	35		2860	10.8	26.2	37		4410	17.8	34.0	36		6350	24.9	60.0	33		10600	38.3	79.0
2 2 .	2900	127	22.874	2190	29.9	11.0	134	21.568	3770	54.9	12.5	129	22.549	6350	88.6	35.0	121	23.974	10800	142	41.0
	1450	63		2760	18.9	15.7	67		4410	32	15.9	64		6350	44.3	45.0	60		10800	70.7	52.0
	960	42		2860	12.9	22.4	45		4410	21.2	28.0	43		6350	29.3	56.0	40		10800	46.8	70.0
	725	32		2860	9.75	26.2	34		4410	16	34.0	32		6350	22.1	60.0	30		10800	35.4	79.0
2 5 .	2900	111	26.037	1880	22.6	11.4	111	26.029	3760	45.2	13.0	114	25.455	6200	76.7	38.0	111	26.071	9530	115	43.0
	1450	56		2370	14.2	17.0	56		3770	22.7	23.0	57		6200	38.3	51.0	56		10600	63.8	60.0
	960	37		2640	10.5	26.2	37		3770	15	34.0	38		6200	25.4	60.0	37		10600	42.2	79.0
	725	28		2640	7.93	28.0	28		3770	11.3	40.0	28		6200	19.1	64.0	28		10600	31.9	79.0
2 8 .	2900	101	28.744	1900	20.7	11.4	97	29.992	3770	39.5	13.0	102	28.35	6200	68.9	38.0	103	28.247	9770	109	43.0
	1450	50		2400	13	17.0	48		3770	19.7	23.0	51		6200	34.4	51.0	51		9970	55.6	60.0
	960	33		2640	9.51	26.2	32		3770	13	34.0	34		6200	22.8	60.0	34		9980	36.8	79.0
	725	25		2640	7.18	28.0	24		3770	9.85	40.0	26		6200	17.2	64.0	26		9980	27.8	79.0
3 2 .	2900	90	32.31	2330	22.6	13.0	94	30.756	4220	43.1	15.0	91	31.888	6350	62.9	42.0	84	34.509	10700	97.6	46.0
	1450	45		2860	13.8	22.4	47		4410	22.5	28.0	45		6350	31.4	56.0	42		10700	48.8	70.0
	960	30		2860	9.16	28.0	31		4410	14.9	40.0	30		6350	20.8	64.0	28		10700	32.3	79.0
	725	22		2860	6.92	28.0	24		4410	11.2	40.0	23		6350	15.7	64.0	21		10700	24.4	79.0
3 6 .	2900	81	35.669	2350	20.7	13.0	82	35.438	4410	39.1	15.0	82	35.515	6350	56.6	42.0	78	37.388	10800	91.3	46.0
	1450	41		2860	12.5	22.4	41		4410	19.5	28.0	41		6350	28.3	56.0	39		10800	45.6	70.0
	960	27		2860	8.3	28.0	27		4410	12.9	40.0	27		6350	18.7	64.0	26		10800	30.2	79.0
	725	20		2860	6.26	28.0	20		4410	9.76	40.0	20		6350	14.1	64.0	19		10800	22.8	79.0
4 0 .	2900	72	40.252	2460	19.3	15.7	78	37.059	4160	35.3	15.9	74	39.008	6090	49.4	45.0	74	39.42	9400	75.7	52.0
	1450	36		2470	9.62	26.2	39		4160	17.6	34.0	37		6460	26.2	60.0	37		9940	39.9	79.0
	960	24		2470	6.37	28.0	26		4160	11.7	40.0	25		6460	17.4	64.0	24		10100	26.9	79.0
	725	18		2470	4.81	28.0	20		4160	8.82	40.0	19		6460	13.1	64.0	18		10100	20.3	79.0
4 5 .	2900	65	44.438	2470	17.4	15.7	68	42.7	4160	30.7	15.9	67	43.445	6160	45	45.0	68	42.709	9460	70.2	52.0
	1450	33		2470	8.71	26.2	34		4160	15.3	34.0	33		6460	23.6	60.0	34		10000	37.1	79.0
	960	22		2470	5.77	28.0	22		4160	10.1	40.0	22		6460	15.6	64.0	22		10100	24.8	79.0
	725	16		2470	4.35	28.0	17		4160	7.66	40.0	17		6460	11.8	64.0	17		10100	18.7	79.0
5 0 .	2900	59	49.069	2430	15.6	17.0	61	47.929	4250	27.9	23.0	60	48.629	5660	36.7	51.0	57	51.273	8130	50.1	60.0
	1450	30		2860	9.14	28.0	30		4260	14	40.0	30		5660	18.4	64.0	28		8140	25.1	79.0
	960	20		2860	6.05	28.0	20		4260	9.25	40.0	20		5660	12.2	64.0	19		8140	16.6	79.0
	725	15		2860	4.57	28.0	15		4260	6.98	40.0	15		5660	9.19	64.0	14		8140	12.5	79.0
5 6 .	2900	53	55.176	2120	12.1	17.0	56	51.494	3870	23.7	23.0	56	51.738	6020	36.7	51.0	50	57.515	8440	46.5	60.0
	1450	26		2000	5.71	28.0	28		3870	11.8	40.0	28		6030	18.4	64.0	25		8450	23.2	79.0
	960	17		1940	3.67	28.0	19		3870	7.84	40.0	19		6030	12.2	64.0	17		8450	15.4	79.0
	725	13		1910	2.72	28.0	14		3870	5.92	40.0	14		6030	9.19	64.0	13		8450	11.6	79.0
6 3 .	2900	47	61.131	2470	12.7	22.4	50	57.75	4160	22.7	28.0	49	59.488	6360	33.8	56.0	50	58.569	9270	50.1	70.0
	1450	24		2470	6.35	28.0	25		4160	11.4	40.0	24		6460	17.2	64.0	25		9270	25.1	79.0
	960	16		2470	4.21	28.0	17		4160	7.52	40.0	16		6460	11.4	64.0	16		9280	16.6	79.0
	725	12		2470	3.18	28.0	13		4160	5.68	40.0	12		6460	8.59	64.0	12		9280	12.5	79.0
7 1 .	2900	42	68.74	2470	11.3	22.4	47	62.045	4160	21.2	28.0	46	63.291	6400	32	56.0	44	65.7	9620	46.5	70.0
	1450	21		2470	5.66	28.0	23		4160	10.6	40.0	23		6460	16.1	64.0	22		9630	23.2	79.0
	960	14		2420	3.67	28.0	15		4160	7.02	40.0	15		6460	10.7	64.0	15		9630	15.4	79.0
	725	11		2380	2.72	28.0	12		4160	5.3	40.0	11		6460	8.07	64.0	11		9630	11.6	79.0

TRIPLE REDUCTION RATINGS
SIZES M01 - M04

0102

Pm - Input Power (kW) *N2* - Output Speed (rpm)
M2 - Output Torque (Nm) fra - Overhung Load (kN)
i - Exact Ratio (:1)

TRIPLE REDUCTION

Column Entry 6 7 8	Input Speed N1 (rpm)	M0132					M0232					M0332					M0432				
		N2 (rpm)	i (:1)	M2 (Nm)	Pm (kW)	fra (kN)	N2 (rpm)	i (:1)	M2 (Nm)	Pm (kW)	fra (kN)	N2 (rpm)	i (:1)	M2 (Nm)	Pm (kW)	fra (kN)	N2 (rpm)	i (:1)	M2 (Nm)	Pm (kW)	fra (kN)
5 6 .	2900	50	58.461	90	0.5	1.50	51	57.027	159	0.89	4.00	51	57.027	209	1.17	2.80	50	58.382	287	1.57	6.70
	1450	25		90	0.25	1.90	25		160	0.45	4.00	25		209	0.58	3.15	25		338	0.92	7.20
	960	16		90	0.16	1.90	17		160	0.3	4.00	17		209	0.39	3.15	16		338	0.61	7.20
	725	12		90	0.12	1.90	13		160	0.22	4.00	13		209	0.29	3.15	12		338	0.46	7.20
6 3 .	2900	45	64.453	90	0.45	1.50	46	62.872	160	0.81	4.00	46	62.872	209	1.06	2.90	45	64.290	293	1.46	7.10
	1450	22		90	0.22	1.90	23		160	0.41	4.00	23		209	0.53	3.15	23		338	0.84	7.20
	960	15		90	0.15	1.90	15		160	0.27	4.00	15		209	0.35	3.15	15		338	0.55	7.20
	725	11		90	0.11	1.90	12		160	0.2	4.00	12		209	0.26	3.15	11		338	0.42	7.20
7 1 .	2900	41	70.933	90	0.41	1.60	42	69.193	160	0.74	4.00	42	69.193	209	0.97	3.00	39	73.950	302	1.31	7.20
	1450	20		90	0.2	1.90	21		160	0.37	4.00	21		209	0.48	3.15	20		338	0.73	7.20
	960	14		90	0.13	1.90	14		160	0.24	4.00	14		209	0.32	3.15	13		338	0.48	7.20
	725	10		90	0.1	1.90	10		160	0.18	4.00	10		209	0.24	3.15	9.8		338	0.36	7.20
8 0 .	2900	35	83.104	90	0.35	1.70	36	81.066	160	0.63	4.00	36	81.066	209	0.82	3.10	36	80.397	307	1.22	7.20
	1450	17		90	0.17	1.90	18		160	0.31	4.00	18		209	0.41	3.15	18		338	0.67	7.20
	960	12		90	0.12	1.90	12		160	0.21	4.00	12		209	0.27	3.15	12		338	0.44	7.20
	725	8.7		90	0.09	1.90	8.9		160	0.16	4.00	8.9		209	0.2	3.15	9.0		338	0.33	7.20
1 0 0	2900	29	99.702	90	0.29	1.90	30	97.257	160	0.53	4.00	30	97.257	209	0.69	3.15	30	96.516	324	1.07	7.20
	1450	15		90	0.14	1.90	15		160	0.26	4.00	15		209	0.34	3.15	15		338	0.56	7.20
	960	9.6		90	0.1	1.90	9.9		160	0.17	4.00	9.9		209	0.23	3.15	9.9		338	0.37	7.20
	725	7.3		90	0.07	1.90	7.5		160	0.13	4.00	7.5		209	0.17	3.15	7.5		338	0.28	7.20
1 1 2	2900	25	116.22	90	0.25	1.90	26	113.37	160	0.45	4.00	26	113.37	209	0.59	3.15	25	115.819	338	0.93	7.20
	1450	12		90	0.12	1.90	13		160	0.23	4.00	13		209	0.29	3.15	13		338	0.47	7.20
	960	8.3		90	0.08	1.90	8.5		160	0.15	4.00	8.5		209	0.19	3.15	8.3		338	0.31	7.20
	725	6.2		90	0.06	1.90	6.4		160	0.11	4.00	6.4		209	0.15	3.15	6.3		338	0.23	7.20
1 2 5	2900	22	129.134	90	0.22	1.90	23	125.967	160	0.41	4.00	23	125.967	209	0.53	3.15	22	130.500	338	0.83	7.20
	1450	11		90	0.11	1.90	12		160	0.2	4.00	12		209	0.27	3.15	11		338	0.41	7.20
	960	7.4		90	0.07	1.90	7.6		160	0.14	4.00	7.6		209	0.18	3.15	7.4		338	0.27	7.20
	725	5.6		90	0.06	1.90	5.6		160	0.1	4.00	5.6		209	0.13	3.15	5.6		338	0.21	7.20
1 6 0	2900	19	155.506	90	0.19	1.90	19	151.692	160	0.34	4.00	19	151.692	209	0.44	3.15	19	151.706	338	0.71	7.20
	1450	9.3		90	0.09	1.90	9.6		160	0.17	4.00	10		209	0.22	3.15	9.6		338	0.36	7.20
	960	6.2		90	0.06	1.90	6.3		160	0.11	4.00	6.3		209	0.15	3.15	6.3		338	0.23	7.20
	725	4.7		90	0.05	1.90	4.8		160	0.08	4.00	4.8		209	0.11	3.15	4.8		338	0.18	7.20
1 8 0	2900	16	178.241	90	0.16	1.90	17	173.87	160	0.29	4.00	17	173.87	209	0.39	3.15	17	172.188	338	0.63	7.20
	1450	8.1		90	0.08	1.90	8.3		160	0.15	4.00	8.3		209	0.19	3.15	8.4		338	0.31	7.20
	960	5.4		90	0.05	1.90	5.5		160	0.1	4.00	5.5		209	0.13	3.15	5.6		338	0.21	7.20
	725	4.1		90	0.04	1.90	4.2		160	0.07	4.00	4.2		209	0.1	3.15	4.2		338	0.16	7.20
2 0 0	2900	14	202.567	90	0.14	1.90	15	197.599	160	0.26	4.00	15	197.599	209	0.34	3.15	15	195.75	338	0.55	7.20
	1450	7.2		90	0.07	1.90	7.3		160	0.13	4.00	7.3		209	0.17	3.15	7.7		338	0.28	7.20
	960	4.7		90	0.05	1.90	4.9		160	0.09	4.00	4.9		209	0.11	3.15	4.9		338	0.18	7.20
	725	3.6		90	0.04	1.90	3.7		160	0.06	4.00	3.7		209	0.09	3.15	3.7		338	0.14	7.20

TRIPLE REDUCTION RATINGS
SIZES M05 - M08

Pm - Input Power (kW) *N2* - Output Speed (rpm)
M2 - Output Torque (Nm) fra - Overhung Load (kN)
i - Exact Ratio (:1)

TRIPLE REDUCTION

Column Entry	Input Speed N1 (rpm)	M0532					M0632					M0732					M0832				
6 7 8		N2 (rpm)	i (:1)	M2 (Nm)	Pm (kW)	fra (kN)	N2 (rpm)	i (:1)	M2 (Nm)	Pm (kW)	fra (kN)	N2 (rpm)	i (:1)	M2 (Nm)	Pm (kW)	fra (kN)	N2 (rpm)	i (:1)	M2 (Nm)	Pm (kW)	fra (kN)
5 6 .	2900	50	58.382	443	2.42	4.20						49	58.950	640	3.47	4.50	48	60.330	1300	6.94	9.25
	1450	25		450	1.22	7.20						25		754	2.03	8.10	24		1600	4.23	16.20
	960	16		450	0.81	7.20						16		865	1.54	9.20	16		1700	2.96	16.20
	725	12		450	0.61	7.20						12		868	1.17	9.20	12		1700	2.23	16.20
6 3 .	2900	45	64.290	431	2.14	4.50	40	72.282	549	2.42	7.20	46	62.834	649	3.3	4.65	44	66.02	1340	6.5	9.50
	1450	23		450	1.11	7.20	20		626	1.38	7.20	23		770	1.95	9.20	22		1650	3.97	16.20
	960	15		450	0.74	7.20	13		626	0.91	7.20	15		868	1.45	9.20	15		1700	2.71	16.20
	725	11		450	0.56	7.20	10		626	0.69	7.20	12		868	1.09	9.20	11		1700	2.04	16.20
7 1 .	2900	39	73.950	443	1.91	5.00	36	79.598	534	2.14	7.20	39	74.467	673	2.88	5.10	39	74.691	1390	5.96	10.00
	1450	20		450	0.97	7.20	18		623	1.24	7.20	19		815	1.74	9.20	19		1700	3.62	16.20
	960	13		450	0.64	7.20	12		626	0.82	7.20	13		868	1.22	9.20	13		1700	2.39	16.20
	725	10		450	0.48	7.20	9.1		626	0.62	7.20	10		868	0.92	9.20	10		1700	1.8	16.20
8 0 .	2900	36	80.397	450	1.78	5.60	32	91.557	549	1.91	7.20	36	79.507	682	2.74	6.30	34	84.31	1440	5.47	12.30
	1450	18		450	0.89	7.20	16		626	1.09	7.20	18		833	1.67	9.20	17		1700	3.21	16.20
	960	12		450	0.59	7.20	10.4		626	0.72	7.20	12		868	1.15	9.20	11		1700	2.12	16.20
	725	9.0		450	0.44	7.20	7.8		626	0.54	7.20	9		868	0.87	9.20	9		1700	1.6	16.20
1 0 0	2900	30	96.516	450	1.49	6.30	29	99.54	558	1.79	7.20	29	98.661	714	2.31	7.40	28	102.204	1520	4.78	14.00
	1450	15		450	0.74	7.20	15		626	1	7.20	15		868	1.4	9.20	14		1700	2.65	16.20
	960	9.9		450	0.49	7.20	9.6		626	0.66	7.20	10		868	0.93	9.20	9		1700	1.75	16.20
	725	7.5		450	0.37	7.20	7.3		626	0.5	7.20	7		868	0.7	9.20	7		1700	1.32	16.20
1 1 2	2900	25	115.819	450	1.24	7.20	24	119.496	585	1.56	7.20	25	116.342	751	2.06	9.20	24	119.188	1600	4.29	16.20
	1450	13		450	0.62	7.20	12		626	0.83	7.20	12		868	1.19	9.20	12		1700	2.27	16.20
	960	8.3		450	0.41	7.20	8.0		626	0.55	7.20	8		868	0.79	9.20	8		1700	1.5	16.20
	725	6.3		450	0.31	7.20	6.1		626	0.42	7.20	6		874	0.6	9.20	6		1700	1.13	16.20
1 2 5	2900	22	130.500	450	1.1	7.20	20	143.395	613	1.37	7.20	23	127.392	774	1.94	9.20	22	130.924	1640	4.02	16.20
	1450	11		450	0.55	7.20	10.1		626	0.7	7.20	11		868	1.09	9.20	11		1700	2.07	16.20
	960	7.4		450	0.36	7.20	6.7		626	0.46	7.20	8		868	0.72	9.20	7		1700	1.37	16.20
	725	5.6		450	0.28	7.20	5.1		626	0.35	7.20	6		883	0.55	9.20	6		1700	1.03	16.20
1 6 0	2900	19	151.706	450	0.95	7.20	18	161.571	626	1.24	7.20	19	156.123	828	1.7	9.20	18	160.446	1700	3.39	16.20
	1450	9.9		450	0.47	7.20	9.0		626	0.62	7.20	9		868	0.89	9.20	9		1700	1.69	16.20
	960	6.3		450	0.31	7.20	5.9		626	0.41	7.20	6		875	0.59	9.20	6		1700	1.12	16.20
	725	4.8		450	0.24	7.20	4.5		626	0.31	7.20	5		888	0.45	9.20	5		1720	0.85	16.20
1 8 0	2900	17	172.188	450	0.83	7.20	15	187.827	626	1.06	7.20	17	174.012	858	1.58	9.20	17	175.207	1700	3.1	16.20
	1450	8.4		450	0.42	7.20	7.7		626	0.53	7.20	8		868	0.8	9.20	8		1700	1.55	16.20
	960	5.6		450	0.28	7.20	5.1		626	0.35	7.20	6		886	0.54	9.20	5		1700	1.02	16.20
	725	4.2		450	0.21	7.20	3.9		626	0.26	7.20	4		888	0.41	9.20	4		1730	0.79	16.20
2 0 0	2900	15	195.75	450	0.74	7.20	14	213.185	626	0.94	7.20	15	195.154	868	1.43	9.20	14	201.754	1700	2.7	16.20
	1450	7.4		450	0.37	7.20	6.8		626	0.47	7.20	7		868	0.71	9.20	7		1700	1.35	16.20
	960	4.9		450	0.24	7.20	4.5		626	0.31	7.20	5		888	0.48	9.20	5		1710	0.9	16.20
	725	3.7		450	0.18	7.20	3.4		626	0.23	7.20	4		888	0.36	9.20	4		1750	0.69	16.20
2 2 5	2900						12	242.36	626	0.83	7.20										
	1450						6.0		626	0.41	7.20										
	960						4.0		626	0.27	7.20										
	725						3.0		626	0.21	7.20										

TRIPLE REDUCTION RATINGS
SIZES M09 - M14

0108

Pm	-	Input Power	(kW)	*N2*	-	Output Speed	(rpm)
M2	-	Output Torque	(Nm)	fra	-	Overhung Load	(kN)
i	-	Exact Ratio	(:1)				

TRIPLE REDUCTION

Column Entry	Input Speed	M0931					M1031					M1331					M1431				
6 7 8	N1 (rpm)	N2 (rpm)	i (:1)	M2 (Nm)	Pm (kW)	fra (kN)	N2 (rpm)	i (:1)	M2 (Nm)	Pm (kW)	fra (kN)	N2 (rpm)	i (:1)	M2 (Nm)	Pm (kW)	fra (kN)	N2 (rpm)	i (:1)	M2 (Nm)	Pm (kW)	fra (kN)
4 0 .	2900											73	39.93	4380	35	45.0	70	41.36	7520	58.1	52.0
	1450											36		5530	21.9	60.0	35		9740	37.5	79.0
	960											24		5940	15.6	64.0	23		10500	26.6	79.0
	725											18		6200	12.3	64.0	18		11100	21.3	79.0
4 5 .	2900											66	44.18	5360	38.9	45.0	60	48.21	9430	62.7	52.0
	1450											33		6170	22.2	60.0	30		11000	36.4	79.0
	960											22		6350	15.1	64.0	20		11000	24.1	79.0
	725											16		6350	11.4	64.0	15		11000	18.2	79.0
5 0 .	2900											58	50.02	5460	35	51.0	53	54.75	9930	58.1	60.0
	1450											29		6310	20.1	64.0	26		11000	32.1	79.0
	960											19		6350	13.4	64.0	18		11000	21.2	79.0
	725											14		6350	10.1	64.0	13		11000	16	79.0
5 6 .	2900	48	59.846	2100	11.2	17.0	48	60.229	3380	17.9	23.0	51	56.932	5270	29.6	51.0	49	59.456	8680	46.7	60.0
	1450	24		2590	6.84	28.0	24		3770	9.94	40.0	25		6190	17.3	64.0	24		10500	28.1	79.0
	960	16		2640	4.62	28.0	16		3770	6.57	40.0	17		6200	11.4	64.0	16		11100	19.7	79.0
	725	12		2640	3.49	28.0	12		3770	4.95	40.0	13		6200	8.63	64.0	12		11100	14.8	79.0
6 3 .	2900	44	66.489	2170	10.4	22.4	43	66.928	3490	16.6	28.0	45	64.174	5380	26.8	56.0	44	65.549	9020	44	70.0
	1450	22		2640	6.29	28.0	22		3770	8.95	40.0	23		6200	15.3	64.0	22		10700	26	79.0
	960	14		2640	4.16	28.0	14		3770	5.91	40.0	15		6200	10.1	64.0	15		11100	17.8	79.0
	725	11		2640	3.14	28.0	11		3770	4.46	40.0	11		6200	7.66	64.0	11		11100	13.5	79.0
7 1 .	2900	39	74.265	2350	10.1	22.4	41	71.167	3640	16.4	28.0	41	71.321	5920	26.6	56.0	37	78.698	11000	44.8	70.0
	1450	20		2860	6.1	28.0	20		4410	9.85	40.0	20		6350	14.2	64.0	18		11000	22.3	79.0
	960	13		2860	4.03	28.0	13		4410	6.51	40.0	13		6350	9.39	64.0	12		11000	14.8	79.0
	725	10		2860	3.04	28.0	10		4410	4.91	40.0	10		6350	7.09	64.0	9		11000	11.1	79.0
8 0 .	2900	35	82.508	2420	9.38	26.2	37	79.082	3760	15.2	34.0	36	80.394	6060	24.1	60.0	33	86.763	11000	40.7	79.0
	1450	18		2860	5.49	28.0	18		4410	8.87	40.0	18		6350	12.6	64.0	17		11000	20.3	79.0
	960	12		2860	3.63	28.0	12		4410	5.86	40.0	12		6350	8.33	64.0	11		11000	13.4	79.0
	725	9		2860	2.74	28.0	9		4410	4.42	40.0	9		6350	6.29	64.0	8		11000	10.1	79.0
9 0 .	2900	31	93.918	2400	8.15	26.2	30	95.441	3770	12.6	34.0	32	90.751	5930	20.9	60.0	31	94.354	10100	34.4	79.0
	1450	15		2640	4.46	28.0	15		3770	6.27	40.0	16		6200	10.9	64.0	15		11100	18.8	79.0
	960	10		2640	2.95	28.0	10		3770	4.15	40.0	11		6200	7.21	64.0	10		11100	12.4	79.0
	725	8		2640	2.23	28.0	8		3770	3.13	40.0	8		6200	5.44	64.0	8		11100	9.39	79.0
1 0 0	2900	28	103.683	2480	7.6	28.0	26	109.969	3770	10.9	40.0	29	101.074	6050	19.2	64.0	28	102.226	10300	32.2	79.0
	1450	14		2640	4.04	28.0	13		3770	5.45	40.0	14		6200	9.79	64.0	14		11100	17.3	79.0
	960	9		2640	2.67	28.0	9		3770	3.6	40.0	9		6200	6.48	64.0	9		11100	11.5	79.0
	725	7		2640	2.02	28.0	7		3770	2.72	40.0	7		6200	4.89	64.0	7		11100	8.66	79.0
1 1 2	2900	25	116.546	2690	7.36	28.0	26	112.773	4180	11.8	40.0	26	113.688	6350	18	64.0	23	124.89	11000	28.3	79.0
	1450	12		2860	3.89	28.0	13		4410	6.22	40.0	13		6350	8.95	64.0	12		11000	14.1	79.0
	960	8		2860	2.57	28.0	9		4410	4.11	40.0	8		6350	5.92	64.0	8		11000	9.34	79.0
	725	6		2860	1.94	28.0	6		4410	3.1	40.0	6		6350	4.47	64.0	6		11000	7.05	79.0
1 2 5	2900	23	128.664	2770	6.86	28.0	22	129.94	4360	10.7	40.0	23	126.62	6350	16.1	64.0	21	135.311	11000	26.1	79.0
	1450	11		2860	3.52	28.0	11		4410	5.4	40.0	11		6350	8.04	64.0	11		11000	13	79.0
	960	7		2860	2.33	28.0	7		4410	3.57	40.0	8		6350	5.32	64.0	7		11000	8.61	79.0
	725	6		2860	1.76	28.0	6		4410	2.7	40.0	6		6350	4.02	64.0	5		11000	6.5	79.0
1 4 0	2900	20	145.196	2470	5.46	28.0	21	135.882	4160	9.82	40.0	21	139.073	6460	15	64.0	20	142.663	10100	22.9	79.0
	1450	10		2470	2.71	28.0	11		4160	4.89	40.0	10		6460	7.47	64.0	10		10100	11.4	79.0
	960	7		2470	1.79	28.0	7		4170	3.23	40.0	7		6460	4.94	64.0	7		10100	7.54	79.0
	725	5		2470	1.35	28.0	5		4170	2.44	40.0	5		6460	3.73	64.0	5		10100	5.69	79.0
1 6 0	2900	18	160.292	2470	4.94	28.0	19	156.567	4160	8.53	40.0	19	154.892	6460	13.5	64.0	19	154.566	10100	21.1	79.0
	1450	9		2470	2.46	28.0	9		4170	4.25	40.0	9		6460	6.71	64.0	9		10100	10.5	79.0
	960	6		2470	1.62	28.0	6		4170	2.81	40.0	6		6460	4.44	64.0	6		10100	6.95	79.0
	725	5		2480	1.23	28.0	5		4200	2.13	40.0	5		6460	3.35	64.0	5		10100	5.25	79.0
1 8 0	2900	16	176.998	2860	5.15	28.0	17	175.738	4410	8.03	40.0	17	173.374	6350	11.7	64.0	16	185.558	11000	19	79.0
	1450	8		2860	2.57	28.0	8		4410	4	40.0	8		6350	5.86	64.0	8		11000	9.49	79.0
	960	5		2860	1.7	28.0	5		4410	2.65	40.0	6		6350	3.88	64.0	5		11000	6.28	79.0
	725	4		2860	1.28	28.0	4		4410	2	40.0	4		6350	2.93	64.0	4		11000	4.74	79.0
2 0 0	2900	15	199.029	2860	4.59	28.0	15	188.81	4410	7.48	40.0	16	184.459	6350	11	64.0	14	208.15	11000	17	79.0
	1450	7		2860	2.29	28.0	8		4410	3.73	40.0	8		6350	5.5	64.0	7		11000	8.48	79.0
	960	5		2860	1.51	28.0	5		4410	2.47	40.0	5		6350	3.64	64.0	5		11000	5.61	79.0
	725	4		2860	1.14	28.0	4		4410	1.86	40.0	4		6350	2.75	64.0	3		11000	4.23	79.0
2 2 5	2900	13	220.508	2470	3.59	28.0	14	211.75	4160	6.31	40.0	14	212.086	6460	9.8	64.0	14	211.965	10100	15.4	79.0
	1450	7		2470	1.79	28.0	7		4170	3.15	40.0	7		6460	4.89	64.0	7		10100	7.66	79.0
	960	4		2480	1.19	28.0	5		4210	2.1	40.0	5		6460	3.23	64.0	5		10100	5.07	79.0
	725	3		2480	0.89	28.0	3		4270	1.61	40.0	3		6460	2.44	64.0	3		10100	3.83	79.0
2 5 0	2900	12	247.956	2470	3.2	28.0	13	227.5	4160	5.88	40.0	13	225.646	6460	9.21	64.0	12	237.771	10100	13.7	79.0
	1450	6		2470	1.59	28.0	6		4170	2.93	40.0	6		6460	4.59	64.0	6		10100	6.84	79.0
	960	4		2480	1.06	28.0	4		4240	1.97	40.0	4		6460	3.04	64.0	4		10100	4.53	79.0
	725	3		2480	0.8	28.0	3		4270	1.5	40.0	3		6460	2.29	64.0	3		10100	3.42	79.0

QUADRUPLE REDUCTION RATINGS
SIZES M03 - M07

0102

Pm	-	Input Power	(kW)	*N2*	-	Output Speed	(rpm)
M2	-	Output Torque	(Nm)	fra	-	Overhung Load	(kN)
i	-	Exact Ratio	(:1)				

QUADRUPLE REDUCTION

Column Entry	Input Speed	M0342					M0442					M0542					M0642					M0742				
6 7 8	N1 (rpm)	N2 (rpm)	i (:1)	M2 (Nm)	Pm (kW)	fra (kN)	N2 (rpm)	i (:1)	M2 (Nm)	Pm (kW)	fra (kN)	N2 (rpm)	i (:1)	M2 (Nm)	Pm (kW)	fra (kN)	N2 (rpm)	i (:1)	M2 (Nm)	Pm (kW)	fra (kN)	N2 (rpm)	i (:1)	M2 (Nm)	Pm (kW)	fra (kN)
2 2 5	2900	12.34	235	210	0.29	3.15	12.46	232.8	340	0.467	7.2	12.46	232.8	450	0.62	7.2					7.2	12.66	229	865	1.21	9.2
	1450	6.171		210	0.143	3.15	6.228		340	0.233	7.2	6.228		450	0.309	7.2					7.2	6.332		865	0.604	9.2
	960	4.086		210	0.095	3.15	4.124		340	0.155	7.2	4.124		450	0.205	7.2					7.2	4.192		865	0.4	9.2
	725	3.064		210	0.071	3.15	3.093		340	0.116	7.2	3.093		450	0.15	7.2					7.2	3.144		865	0.30	9.2
2 5 0	2900	11.10	261.4	210	0.26	3.15	11.13	260.5	340	0.417	7.2	11.13	260.5	450	0.55	7.2					7.2	11.17	259.7	865	0.53	9.2
	1450	5.548		210	0.128	3.15	5.567		340	0.209	7.2	5.567		450	0.276	7.2					7.2	5.584		865	0.532	9.2
	960	3.673		210	0.085	3.15	3.686		340	0.138	7.2	3.686		450	0.183	7.2					7.2	3.697		865	0.532	9.2
	725	2.755		210	0.064	3.15	2.764		340	0.104	7.2	2.764		450	0.14	7.2					7.2	2.773		865	0.53	9.2
2 8 0	2900	10.08	287.8	210	0.23	3.15	10.45	277.6	340	0.391	7.2	10.45	277.6	450	0.52	7.2	10.63	272.9	620	0.73	7.2	10.12	286.4	865	0.97	9.2
	1450	5.038		210	0.117	3.15	5.223		340	0.196	7.2	5.223		450	0.259	7.2	5.313		620	0.363	7.2	5.062		865	0.483	9.2
	960	3.335		210	0.077	3.15	3.458		340	0.13	7.2	3.458		450	0.172	7.2	3.518		620	0.24	7.2	3.352		865	0.32	9.2
	725	2.501		210	0.058	3.15	2.593		340	0.097	7.2	2.593		450	0.13	7.2	2.638		620	0.18	7.2	2.514		865	0.24	9.2
3 0 0	2900	9.14	317.3	210	0.212	3.15	9.486	305.7	340	0.355	7.2	9.486	305.7	450	0.47	7.2	9.238	313.9	620	0.63	7.2	9.194	315.4	865	0.88	9.2
	1450	4.569		210	0.106	3.15	4.743		340	0.178	7.2	4.743		450	0.235	7.2	4.619		620	0.316	7.2	4.597		865	0.438	9.2
	960	3.025		210	0.07	3.15	3.14		340	0.118	7.2	3.140		450	0.156	7.2	3.058		620	0.209	7.2	3.044		865	0.29	9.2
	725	2.269		210	0.053	3.15	2.355		340	0.088	7.2	2.355		450	0.12	7.2	2.294		620	0.16	7.2	2.283		865	0.22	9.2
3 6 0	2900	7.94	365	210	0.184	3.15	8.004	362.3	340	0.3	7.2	8.004	362.3	450	0.40	7.2	7.943	365.1	620	0.54	7.2	8.028	361.2	865	0.77	9.2
	1450	3.972		210	0.092	3.15	4.002		340	0.15	7.2	4.002		450	0.199	7.2	3.971		620	0.271	7.2	4.014		865	0.383	9.2
	960	2.630		210	0.061	3.15	2.65		340	0.099	7.2	2.650		450	0.131	7.2	2.629		620	0.18	7.2	2.658		865	0.253	9.2
	725	1.973		210	0.046	3.15	1.987		340	0.074	7.2	1.987		450	0.10	7.2	1.972		620	0.13	7.2	1.993		865	0.19	9.2
4 0 0	2900	7.22	401.7	210	0.167	3.15	6.959	416.8	340	0.261	7.2	6.959	416.8	450	0.35	7.2	7.306	396.9	620	0.50	7.2	6.980	415.5	865	0.67	9.2
	1450	3.610		210	0.084	3.15	3.479		340	0.13	7.2	3.479		450	0.173	7.2	3.653		620	0.25	7.2	3.490		865	0.333	9.2
	960	2.390		210	0.055	3.15	2.304		340	0.086	7.2	2.304		450	0.114	7.2	2.419		620	0.165	7.2	2.311		865	0.22	9.2
	725	1.792		210	0.041	3.15	1.728		340	0.065	7.2	1.728		450	0.086	7.2	1.814		620	0.12	7.2	1.733		865	0.17	9.2
4 5 0	2900	6.64	436.7	210	0.154	3.15	6.517	445	340	0.244	7.2	6.517	445	450	0.32	7.2	6.530	444.1	625	0.45	7.2	6.173	469.8	865	0.59	9.2
	1450	3.320		210	0.077	3.15	3.259		340	0.122	7.2	3.259		450	0.162	7.2	3.265		625	0.225	7.2	3.087		865	0.294	9.2
	960	2.198		210	0.051	3.15	2.157		340	0.081	7.2	2.157		450	0.107	7.2	2.162		625	0.149	7.2	2.044		865	0.195	9.2
	725	1.649		210	0.038	3.15	1.618		340	0.061	7.2	1.618		450	0.080	7.2	1.621		625	0.11	7.2	1.533		865	0.15	9.2
5 0 0	2900	5.67	511.7	210	0.131	3.15	5.995	483.8	340	0.225	7.2	5.995	483.8	450	0.297	7.2	5.440	533.1	625	0.375	7.2	5.678	510.7	865	0.541	9.2
	1450	2.834		210	0.066	3.15	2.997		340	0.112	7.2	2.997		450	0.149	7.2	2.720		625	0.187	7.2	2.839		865	0.271	9.2
	960	1.876		210	0.043	3.15	1.984		340	0.074	7.2	1.984		450	0.098	7.2	1.801		625	0.124	7.2	1.880		865	0.179	9.2
	725	1.407		210	0.033	3.15	1.488		340	0.056	7.2	1.488		450	0.074	7.2	1.351		625	0.093	7.2	1.410		865	0.13	9.2
6 5 0	2900	4.72	614.2	210	0.109	3.15	4.831	600.3	340	0.181	7.2	4.831	600.3	450	0.240	7.2	5.104	568.2	625	0.35	7.2	4.898	592.1	865	0.47	9.2
	1450	2.361		210	0.055	3.15	2.415		340	0.091	7.2	2.415		450	0.12	7.2	2.552		625	0.176	7.2	2.449		865	0.233	9.2
	960	1.563		210	0.036	3.15	1.599		340	0.06	7.2	1.599		450	0.079	7.2	1.689		625	0.116	7.2	1.621		865	0.155	9.2
	725	1.172		210	0.027	3.15	1.199		340	0.045	7.2	1.199		450	0.059	7.2	1.267		625	0.087	7.2	1.216		865	0.12	9.2
7 3 0	2900	3.94	736.9	210	0.091	3.15	4.024	720.7	340	0.151	7.2	4.024	720.7	450	0.200	7.2	4.253	681.9	625	0.29	7.2	4.080	710.8	865	0.39	9.2
	1450	1.968		210	0.046	3.15	2.012		340	0.075	7.2	2.012		450	0.1	7.2	2.126		625	0.146	7.2	2.040		865	0.194	9.2
	960	1.303		210	0.03	3.15	1.332		340	0.05	7.2	1.332		450	0.066	7.2	1.408		625	0.097	7.2	1.351		865	0.129	9.2
	725	0.977		210	0.023	3.15	0.999		340	0.037	7.2	0.999		450	0.050	7.2	1.056		625	0.073	7.2	1.013		865	0.097	9.2
8 6 0	2900	3.28	884.3	210	0.076	3.15	3.413	849.8	340	0.128	7.2	3.413	849.8	450	0.169	7.2	3.589	808.1	625	0.247	7.2	3.420	847.8	865	0.33	9.2
	1450	1.640		210	0.038	3.15	1.706		340	0.064	7.2	1.706		450	0.085	7.2	1.794		625	0.124	7.2	1.710		865	0.163	9.2
	960	1.086		210	0.025	3.15	1.13		340	0.042	7.2	1.130		450	0.056	7.2	1.188		625	0.082	7.2	1.132		865	0.108	9.2
	725	0.814		210	0.019	3.15	0.847		340	0.032	7.2	0.847		450	0.042	7.2	0.891		625	0.061	7.2	0.849		865	0.081	9.2
1 0 C	2900	2.81	1031	210	0.065	3.15	2.844	1020	340	0.107	7.2	2.844	1020	450	0.141	7.2	2.983	972.2	625	0.205	7.2	2.850	1017	865	0.27	9.2
	1450	1.407		210	0.033	3.15	1.422		340	0.053	7.2	1.422		450	0.071	7.2	1.491		625	0.103	7.2	1.425		865	0.136	9.2
	960	0.931		210	0.022	3.15	0.941		340	0.035	7.2	0.941		450	0.047	7.2	0.987		625	0.068	7.2	0.944		865	0.09	9.2
	725	0.698		210	0.016	3.15	0.706		340	0.026	7.2	0.706		450	0.035	7.2	0.741		625	0.051	7.2	0.708		865	0.067	9.2
1 1 C	2900	2.50	1161	210	0.058	3.15	2.597	1117	340	0.097	7.2	2.597	1117	450	0.129	7.2	2.566	1130	625	0.177	7.2	2.603	1114	865	0.248	9.2
	1450	1.248		210	0.029	3.15	1.299		340	0.049	7.2	1.299		450	0.064	7.2	1.283		625	0.088	7.2	1.301		865	0.124	9.2
	960	0.827		210	0.019	3.15	0.86		340	0.032	7.2	0.860		450	0.043	7.2	0.849		625	0.059	7.2	0.862		865	0.082	9.2
	725	0.620		210	0.014	3.15	0.645		340	0.024	7.2	0.645		450	0.032	7.2	0.637		625	0.044	7.2	0.646		865	0.062	9.2
1 3 C	2900	2.25	1291	210	0.052	3.15	2.305	1258	340	0.086	7.2	2.305	1258	450	0.114	7.2	2.068	1402	625	0.142	7.2	2.310	1255	865	0.22	9.2
	1450	1.124		210	0.026	3.15	1.152		340	0.043	7.2	1.152		450	0.057	7.2	1.034		625	0.071	7.2	1.155		865	0.11	9.2
	960	0.744		210	0.017	3.15	0.763		340	0.029	7.2	0.763		450	0.038	7.2	0.685		625	0.047	7.2	0.765		865	0.073	9.2
	725	0.558		210	0.013	3.15	0.572		340	0.021	7.2	0.572		450	0.028	7.2	0.513		625	0.035	7.2	0.574		865	0.055	9.2
1 5 C	2900	1.93	1500	203	0.043	3.15	1.881	1542	340	0.07	7.2	1.881	1542	450	0.093	7.2	1.822	1592	625	0.126	7.2	1.925	1506	865	0.184	9.2
	1450	0.967		203	0.022	3.15	0.94		340	0.035	7.2	0.940		450	0.047	7.2	0.911		625	0.063	7.2	0.963		865	0.092	9.2
	960	0.640		203	0.014	3.15	0.623		340	0.023	7.2	0.623		450	0.031	7.2	0.603		625	0.042	7.2	0.637		865	0.061	9.2
	725	0.480		203	0.011	3.15	0.467		340	0.017	7.2	0.467		450	0.023	7.2	0.452		625	0.031	7.2	0.478		865	0.046	9.2
1 8 C	2900	1.61	1807	203	0.036	3.15	1.618	1792	340	0.061	7.2	1.618	1792	450	0.08	7.2	1.545	1877	625	0.106	7.2	1.656	1751	865	0.158	9.2
	1450	0.803		203	0.018	3.15	0.809		340	0.03	7.2	0.809		450	0.04	7.2	0.772		625	0.053	7.2	0.828		865	0.079	9.2
	960	0.531		203	0.012	3.15	0.536		340	0.02	7.2	0.536		450	0.027	7.2	0.511		625	0.035	7.2	0.548		865	0.052	9.2
	725	0.399		203	0.009	3.15	0.402		340	0.015	7.2	0.402		450	0.020	7.2	0.384		625	0.026	7.2	0.411		865	0.039	9.2
2 0 C	2900	1.41	2051	203	0.032	3.15	1.452	1998	340	0.054	7.2	1.452	1998	380	0.061	7.2	1.411	2055	625	0.097	7.2	1.439	2015	725	0.115	9.2
	1450	0.707		203	0.016	3.15	0.726		340	0.027	7.2	0.726		380	0.03	7.2	0.705		625	0.049	7.2	0.720		725	0.058	9.2
	960	0.468		203	0.01	3.15	0.481		340	0.018	7.2	0.481		380	0.02	7.2	0.467		625	0.032	7.2	0.476		725	0.038	9.2
	725	0.351		203	0.008	3.15	0.36		340	0.014	7.2	0.360		380	0.015	7.2	0.350		625	0.024	7.2	0.357		725	0.029	9.2
2 4 C	2900	1.23	2350	203	0.028	3.15	1.279	2268	340	0.048	7.2	1.279	2268	380	0.054	7.2	1.241	2337	625	0.086	7.2	1.268	2287	725	0.101	9.2
	1450	0.617		203	0.014	3.15	0.639		340	0.024	7.2	0.639		380	0.027	7.2	0.621		625	0.043	7.2	0.634		725	0.051	9.2
	960	0.408		203	0.009	3.15	0.423		340	0.016	7.2	0.423		380	0.018	7.2	0.411		625	0.028	7.2	0.420		725	0.034	9.2
	725	0.306		203	0.007	3.15	0.318		340	0.012	7.2	0.318		380	0.013	7.2	0.308		625	0.021	7.2	0.315		725	0.025	9.2
2 7 C	2900	1.09	2671	203	0.024	3.15	1.125	2578	340	0.042	7.2	1.125	2578	380	0.047	7.2	1.151	2519	620	0.079	7.2	1.115	2600	725	0.089	9.2
	1450	0.543		203	0.012	3.15	0.562		340	0.021	7.2	0.562		380	0.024	7.2	0.576		620	0.039	7.2	0.558		725	0.045	9.2
	960	0.359		203	0.008	3.15	0.372		340	0.014	7.2	0.372		380	0.016	7.2	0.381		620	0.026	7.2	0.369		725	0.03	9.2
	725	0.270		203	0.006	3.15	0.279		340	0.01	7.2	0.279		380	0.012	7.2	0.286		620	0.020	7.2	0.277		725	0.022	9.2

QUADRUPLE REDUCTION RATINGS
SIZES M08 - M14

0102

Pm	-	Input Power	(kW)	*N2*	-	Output Speed	(rpm)
M2	-	Output Torque	(Nm)	fra	-	Overhung Load	(kN)
i	-	Exact Ratio	(:1)				

QUADRUPLE REDUCTION

Column Entry	Input Speed	M0842					M0941					M1041					M1341					M1441				
6 7 8	N1 (rpm)	N2 (rpm)	i (:1)	M2 (Nm)	Pm (kW)	fra (kN)	N2 (rpm)	i (:1)	M2 (Nm)	Pm (kW)	fra (kN)	N2 (rpm)	i (:1)	M2 (Nm)	Pm (kW)	fra (kN)	N2 (rpm)	i (:1)	M2 (Nm)	Pm (kW)	fra (kN)	N2 (rpm)	i (:1)	M2 (Nm)	Pm (kW)	fra (kN)
2 2 5	2900	12.67	228.9	1400	1.955	16.20	12.55	231.1	2640	3.65	28.0	13.16	220.3	4410	6.40	40.0	12.78	227	6350	8.94	64.0	11.75	246.9	10600	13.73	79.0
	1450	6.334		1400	0.977	16.20	6.274		2640	1.826	28.0	6.582		4410	3.199	40.0	6.388		6350	4.471	64.0	5.874		10600	6.863	79.0
	960	4.194		1400	0.647	16.20	4.154		2640	1.209	28.0	4.358		4410	2.118	40.0	4.229		6350	2.96	64.0	3.889		10600	4.544	79.0
	725	3.145		1400	0.485	16.20	3.115		2640	0.907	28.0	3.268		4410	1.589	40.0	3.172		6350	2.22	64.0	2.917		10600	3.408	79.0
2 5 0	2900	11.20	259	1500	1.85	16.20	11.23	258.2	2860	3.54	28.0	11.97	242.2	4410	5.82	40.0	11.62	249.6	6350	8.13	64.0	10.68	271.4	10600	12.48	79.0
	1450	5.599		1500	0.926	16.20	5.616		2860	1.77	28.0	5.986		4410	2.91	40.0	5.809		6350	4.066	64.0	5.342		10600	6.241	79.0
	960	3.707		1500	0.613	16.20	3.718		2860	1.172	28.0	3.963		4410	1.926	40.0	3.846		6350	2.692	64.0	3.537		10600	4.132	79.0
	725	2.780		1500	0.46	16.20	2.789		2860	0.879	28.0	2.972		4410	1.445	40.0	2.885		6350	2.019	64.0	2.653		10600	3.099	79.0
2 8 0	2900	9.63	301.2	1500	1.59	16.20	9.66	300.2	2860	3.05	28.0	10.42	278.3	4410	5.06	40.0	10.11	286.8	6350	7.08	64.0	9.30	311.9	10600	10.86	79.0
	1450	4.814		1500	0.796	16.20	4.83		2860	1.523	28.0	5.209		4410	2.532	40.0	5.056		6350	3.539	64.0	4.649		10600	5.432	79.0
	960	3.187		1500	0.527	16.20	3.198		2860	1.008	28.0	3.449		4410	1.677	40.0	3.347		6350	2.343	64.0	3.078		10600	3.596	79.0
	725	2.390		1500	0.395	16.20	2.398		2860	0.756	28.0	2.587		4410	1.257	40.0	2.51		6350	1.757	64.0	2.308		10600	2.697	79.0
3 0 0	2900	8.61	337	1500	1.42	16.20	8.64	335.8	2860	2.72	28.0	9.19	315.6	4410	4.47	40.0	8.92	325.2	6350	6.24	64.0	8.20	353.7	10600	9.58	79.0
	1450	4.303		1500	0.711	16.20	4.318		2860	1.361	28.0	4.594		4410	2.233	40.0	4.459		6350	3.121	64.0	4.1		10600	4.79	79.0
	960	2.849		1500	0.471	16.20	2.859		2860	0.901	28.0	3.042		4410	1.479	40.0	2.952		6350	2.066	64.0	2.715		10600	3.172	79.0
	725	2.136		1500	0.353	16.20	2.144		2860	0.676	28.0	2.281		4410	1.109	40.0	2.214		6350	1.55	64.0	2.036		10600	2.379	79.0
3 6 0	2900	8.07	359.2	1500	1.33	16.20	8.10	358.1	2860	2.55	28.0	8.33	348.2	4410	4.05	40.0	8.08	358.8	6350	5.66	64.0	7.43	390.2	10600	8.68	79.0
	1450	4.037		1500	0.667	16.20	4.05		2860	1.277	28.0	4.164		4410	2.024	40.0	4.041		6350	2.829	64.0	3.716		10600	4.342	79.0
	960	2.673		1500	0.442	16.20	2.681		2860	0.845	28.0	2.757		4410	1.34	40.0	2.676		6350	1.873	64.0	2.46		10600	2.875	79.0
	725	2.005		1500	0.331	16.20	2.011		2860	0.634	28.0	2.068		4410	1.005	40.0	2.007		6350	1.405	64.0	1.845		10600	2.156	79.0
4 0 0	2900	6.81	425.7	1500	1.13	16.20	6.83	424.4	0.535	2.15	28.0	7.27	398.7	4410	3.54	40.0	7.06	410.8	6350	4.94	64.0	6.49	446.7	10600	7.58	79.0
	1450	3.406		1500	0.563	16.20	3.417		2860	1.077	28.0	3.637		4410	1.768	40.0	3.53		6350	2.47	64.0	3.246		10600	3.792	79.0
	960	2.255		1500	0.373	16.20	2.262		1.077	0.713	28.0	2.408		4410	1.17	40.0	2.337		6350	1.636	64.0	2.149		10600	2.511	79.0
	725	1.691		1500	0.28	16.20	1.697		0.713	0.535	28.0	1.806		4410	0.878	40.0	1.753		6350	1.227	64.0	1.612		10600	1.883	79.0
4 5 0	2900	6.04	480.5	1540	1.02	16.20	6.15	471.4	2860	1.94	28.0	6.55	443	4410	3.18	40.0	8.08	358.8	6350	5.66	64.0	5.89	492.3	10800	7.01	79.0
	1450	3.018		1540	0.512	16.20	3.076		2860	0.97	28.0	3.273		4410	1.591	40.0	4.041		6350	2.829	64.0	2.945		10800	3.506	79.0
	960	1.998		1540	0.339	16.20	2.037		2860	0.642	28.0	2.167		4410	1.053	40.0	2.676		6350	1.873	64.0	1.95		10800	2.321	79.0
	725	1.498		1540	0.254	16.20	1.528		2860	0.482	28.0	1.625		4410	0.79	40.0	2.007		6350	1.405	64.0	1.462		10800	1.741	79.0
5 0 0	2900	5.65	513	1540	0.96	16.20	5.76	503.1	2860	1.82	28.0	5.79	501.1	4410	2.81	40.0	5.54	523.8	6350	3.87	64.0	5.21	556.8	10800	6.20	79.0
	1450	2.826		1540	0.48	16.20	2.882		2860	0.908	28.0	2.894		4410	1.407	40.0	2.768		6350	1.937	64.0	2.604		10800	3.1	79.0
	960	1.871		1540	0.318	16.20	1.908		2860	0.601	28.0	1.916		4410	0.931	40.0	1.833		6350	1.283	64.0	1.724		10800	2.052	79.0
	725	1.403		1540	0.238	16.20	1.431		2860	0.451	28.0	1.437		4410	0.698	40.0	1.374		6350	0.962	64.0	1.293		10800	1.539	79.0
6 5 0	2900	4.66	621.9	1700	0.87	16.20	4.64	624.4	2860	1.46	28.0	4.99	580.9	4410	2.43	40.0	4.78	607.3	6350	3.34	64.0	4.49	645.5	10800	6.20	79.0
	1450	2.331		1700	0.437	16.20	2.322		2860	0.732	28.0	2.496		4410	1.213	40.0	2.388		6350	1.671	64.0	2.246		10800	3.1	79.0
	960	1.544		1700	0.289	16.20	1.538		2860	0.485	28.0	1.653		4410	0.803	40.0	1.581		6350	1.106	64.0	1.487		10800	2.052	79.0
	725	1.158		1700	0.217	16.20	1.153		2860	0.364	28.0	1.239		4410	0.603	40.0	1.186		6350	0.83	64.0	1.115		10800	1.539	79.0
7 3 0	2900	3.76	771.8	1700	0.70	16.20	3.94	736.2	2860	1.24	28.0	4.19	692.8	4410	2.03	40.0	4.00	724.3	6350	2.80	64.0	3.77	769.9	10800	4.48	79.0
	1450	1.879		1700	0.352	16.20	1.97		2860	0.621	28.0	2.093		4410	1.017	40.0	2.002		6350	1.401	64.0	1.883		10800	2.242	79.0
	960	1.244		1700	0.233	16.20	1.304		2860	0.411	28.0	1.386		4410	0.674	40.0	1.325		6350	0.928	64.0	1.247		10800	1.484	79.0
	725	0.933		1700	0.175	16.20	0.978		2860	0.308	28.0	1.039		4410	0.505	40.0	0.994		6350	0.696	64.0	0.935		10800	1.113	79.0
8 6 0	2900	3.22	900	1700	0.60	16.20	3.29	882.1	2860	1.04	28.0	3.50	828.4	4410	1.70	40.0	3.38	858.8	6350	2.36	64.0	3.62	801.7	10700	4.27	79.0
	1450	1.611		1700	0.302	16.20	1.644		2860	0.518	28.0	1.75		4410	0.851	40.0	1.688		6350	1.182	64.0	1.809		10700	2.133	79.0
	960	1.067		1700	0.2	16.20	1.088		2860	0.343	28.0	1.159		4410	0.563	40.0	1.118		6350	0.782	64.0	1.198		10700	1.412	79.0
	725	0.8		1700	0.15	16.20	0.816		2860	0.257	28.0	0.869		4410	0.422	40.0	0.838		6350	0.587	64.0	0.898		10700	1.059	79.0
1 0 C	2900	2.73	1061	1700	0.51	16.20	2.79	1040	2860	0.88	28.0	2.94	988	4410	1.43	40.0	2.83	1024	6350	1.98	64.0	3.12	929.4	10700	3.68	79.0
	1450	1.366		1700	0.256	16.20	1.394		2860	0.439	28.0	1.468		4410	0.713	40.0	1.416		6350	0.991	64.0	1.56		10700	1.84	79.0
	960	0.905		1700	0.169	16.20	0.923		2860	0.291	28.0	0.972		4410	0.472	40.0	0.937		6350	0.656	64.0	1.033		10700	1.218	79.0
	725	0.678		1700	0.127	16.20	0.692		2860	0.218	28.0	0.729		4410	0.354	40.0	0.703		6350	0.492	64.0	0.775		10700	0.914	79.0
1 1 C	2900	2.49	1166	1700	0.47	16.20	2.53	1148	2860	0.80	28.0	2.55	1138	4410	1.24	40.0	2.54	1141	6350	1.78	64.0	2.62	1108	10700	3.09	79.0
	1450	1.244		1700	0.233	16.20	1.263		2860	0.398	28.0	1.274		4410	0.619	40.0	1.271		6350	0.89	64.0	1.308		10700	1.543	79.0
	960	0.823		1700	0.154	16.20	0.836		2860	0.264	28.0	0.843		4410	0.41	40.0	0.841		6350	0.589	64.0	0.866		10700	1.021	79.0
	725	0.618		1700	0.116	16.20	0.627		2860	0.198	28.0	0.633		4410	0.307	40.0	0.631		6350	0.442	64.0	0.65		10700	0.766	79.0
1 3 C	2900	2.27	1277	1700	0.43	16.20	2.16	1340	2860	0.68	28.0	2.33	1246	4410	1.13	40.0	2.32	1249	6350	1.62	64.0	2.39	1214	10700	2.82	79.0
	1450	1.136		1700	0.213	16.20	1.082		2860	0.341	28.0	1.163		4410	0.565	40.0	1.161		6350	0.812	64.0	1.195		10700	1.409	79.0
	960	0.752		1700	0.141	16.20	0.717		2860	0.226	28.0	0.77		4410	0.374	40.0	0.768		6350	0.538	64.0	0.791		10700	0.933	79.0
	725	0.564		1700	0.106	16.20	0.537		2860	0.169	28.0	0.578		4410	0.281	40.0	0.576		6350	0.403	64.0	0.593		10700	0.7	79.0
1 5 C	2900	1.85	1564	1700	0.35	16.20	1.84	1580	2860	0.58	28.0	1.88	1540	4260	0.88	40.0	1.90	1528	6350	1.33	64.0	1.93	1502	10100	2.15	79.0
	1450	0.927		1700	0.174	16.20	0.918		2860	0.289	28.0	0.942		4260	0.442	40.0	0.949		6350	0.664	64.0	0.965		10100	1.075	79.0
	960	0.614		1700	0.115	16.20	0.608		2860	0.192	28.0	0.624		4260	0.293	40.0	0.628		6350	0.44	64.0	0.639		10100	0.711	79.0
	725	0.460		1700	0.086	16.20	0.456		2860	0.144	28.0	0.468		4260	0.22	40.0	0.471		6350	0.33	64.0	0.479		10100	0.534	79.0
1 8 C	2900	1.51	1917	1700	0.28	16.20	1.68	1730	2860	0.53	28.0	1.72	1686	4260	0.81	40.0	1.58	1834	6350	1.11	64.0	1.61	1803	10100	1.79	79.0
	1450	0.756		1700	0.142	16.20	0.838		2860	0.264	28.0	0.86		4260	0.404	40.0	0.791		6350	0.553	64.0	0.804		10100	0.895	79.0
	960	0.501		1700	0.094	16.20	0.555		2860	0.175	28.0	0.569		4260	0.267	40.0	0.523		6350	0.366	64.0	0.533		10100	0.593	79.0
	725	0.376		1700	0.07	16.20	0.416		2860	0.131	28.0	0.427		4260	0.201	40.0	0.393		6350	0.275	64.0	0.399		10100	0.445	79.0
2 0 C	2900	1.39	2094	1700	0.26	16.20	1.37	2120	2860	0.43	28.0	1.43	2023	4260	0.67	40.0	1.37	2110	6350	0.96	64.0	1.40	2074	10100	1.56	79.0
	1450	0.693		1700	0.13	16.20	0.684		2860	0.216	28.0	0.717		4260	0.337	40.0	0.687		6350	0.481	64.0	0.699		10100	0.778	79.0
	960	0.459		1700	0.086	16.20	0.453		2860	0.143	28.0	0.475		4260	0.223	40.0	0.455		6350	0.318	64.0	0.463		10100	0.515	79.0
	725	0.344		1700	0.064	16.20	0.34		2860	0.107	28.0	0.356		4260	0.167	40.0	0.341		6350	0.239	64.0	0.347		10100	0.386	79.0
2 4 C	2900	1.24	2333	1700	0.23	16.20	1.23	2363	2860	0.39	28.0	1.25	2327	4260	0.59	40.0	1.24	2345	6350	0.87	64.0	1.26	2305	10100	1.40	79.0
	1450	0.621		1700	0.116	16.20	0.614		2860	0.193	28.0	0.623		4260	0.293	40.0	0.618		6350	0.433	64.0	0.629		10100	0.7	79.0
	960	0.411		1700	0.077	16.20	0.406		2860	0.128	28.0	0.412		4260	0.194	40.0	0.409		6350	0.287	64.0	0.417		10100	0.464	79.0
	725	0.309		1700	0.058	16.20	0.305		2860	0.096	28.0	0.309		4260	0.145	40.0	0.307		6350	0.215	64.0	0.312		10100	0.348	79.0
2 7 C	2900	1.11	2617	1700	0.21	16.20	1.09	2650	2860	0.35	28.0	1.12	2586	4260	0.53	40.0	1.00	2889	6350	0.70	64.0	1.02	2844	9280	1.04	79.0
	1450	0.554		1700	0.104	16.20	0.547		2860	0.173	28.0	0.561		4260	0.263	40.0	0.502		6350	0.351	64.0	0.51		9280	0.521	79.0
	960	0.367		1700	0.069	16.20	0.362		2860	0.114	28.0	0.371		4260	0.174	40.0	0.332		6350	0.233	64.0	0.338		9280	0.345	79.0
	725	0.275		1700	0.052	16.20	0.272		2860	0.086	28.0	0.278		4260	0.131	40.0	0.249		6350	0.174	64.0	0.253		9280	0.259	79.0

QUINTUPLE REDUCTION RATINGS
SIZES M03 - M07

0102

Pm	-	Input Power	(kW)	*N2*	-	Output Speed	(rpm)
M2	-	Output Torque	(Nm)	fra	-	Overhung Load	(kN)
i	-	Exact Ratio	(:1)				

QUINTUPLE REDUCTION

Column Entry	Input Speed	M0352					M0452					M0552					M0652					M0752				
6 7 8	N1 (rpm)	N2 (rpm)	i (:1)	M2 (Nm)	Pm (kW)	fra (kN)	N2 (rpm)	i (:1)	M2 (Nm)	Pm (kW)	fra (kN)	N2 (rpm)	i (:1)	M2 (Nm)	Pm (kW)	fra (kN)	N2 (rpm)	i (:1)	M2 (Nm)	Pm (kW)	fra (kN)	N2 (rpm)	i (:1)	M2 (Nm)	Pm (kW)	fra (kN)
2 7 C	2900	1.102	2632	210	0.026	3.15	1.092	2655	340	0.041	7.20	1.092	2655	450	0.054	7.20	1.095	2649	625	0.075	7.20	1.107	2619	865	0.106	9.20
	1450	0.551		210	0.013	3.15	0.546		340	0.021	7.20	0.546		450	0.027	7.20	0.547		625	0.038	7.20	0.554		865	0.053	9.20
	960	0.365		210	0.009	3.15	0.362		340	0.014	7.20	0.362		450	0.018	7.20	0.362		625	0.025	7.20	0.367		865	0.035	9.20
	725	0.274		210	0.006	3.15	0.271		340	0.010	7.20	0.271		450	0.014	7.20	0.272		625	0.019	7.20	0.275		865	0.026	9.20
3 2 C	2900	0.945	3068	210	0.022	3.15	0.937	3095	340	0.035	7.20	0.937	3095	450	0.046	7.20	0.939	3088	625	0.065	7.20	0.95	3053	865	0.046	9.20
	1450	0.473		210	0.011	3.15	0.468		340	0.018	7.20	0.468		450	0.023	7.20	0.47		625	0.033	7.20	0.475		865	0.046	9.20
	960	0.313		210	0.007	3.15	0.310		340	0.012	7.20	0.31		450	0.016	7.20	0.311		625	0.022	7.20	0.314		865	0.046	9.20
	725	0.235		210	0.005	3.15	0.233		340	0.009	7.20	0.233		450	0.012	7.20	0.233		625	0.016	7.20	0.236		865	0.046	9.20
3 6 C	2900	0.788	3681	210	0.018	3.15	0.795	3650	340	0.030	7.20	0.795	3650	450	0.039	7.20	0.757	3832	625	0.052	7.20	0.796	3641	865	0.076	9.20
	1450	0.394		210	0.009	3.15	0.397		340	0.015	7.20	0.397		450	0.02	7.20	0.378		625	0.026	7.20	0.398		865	0.038	9.20
	960	0.261		210	0.006	3.15	0.263		340	0.010	7.20	0.263		450	0.013	7.20	0.251		625	0.017	7.20	0.264		865	0.025	9.20
	725	0.196		210	0.005	3.15	0.197		340	0.007	7.20	0.197		450	0.01	7.20	0.188		625	0.013	7.20	0.198		865	0.019	9.20
4 0 C	2900	0.709	4091	210	0.016	3.15	0.715	4055	340	0.027	7.20	0.715	4055	450	0.035	7.20	0.681	4258	625	0.047	7.20	0.717	4046	865	0.068	9.20
	1450	0.354		210	0.008	3.15	0.358		340	0.014	7.20	0.358		450	0.018	7.20	0.341		625	0.024	7.20	0.358		865	0.035	9.20
	960	0.235		210	0.005	3.15	0.237		340	0.009	7.20	0.237		450	0.012	7.20	0.225		625	0.016	7.20	0.237		865	0.023	9.20
	725	0.176		210	0.004	3.15	0.178		340	0.007	7.20	0.178		450	0.009	7.20	0.169		625	0.012	7.20	0.178		865	0.017	9.20
4 6 C	2900	0.629	4609	210	0.015	3.15	0.653	4440	340	0.024	7.20	0.653	4440	450	0.032	7.20	0.578	5021	625	0.04	7.20	0.655	4431	865	0.062	9.20
	1450	0.315		210	0.007	3.15	0.327		340	0.012	7.20	0.327		450	0.016	7.20	0.289		625	0.02	7.20	0.327		865	0.032	9.20
	960	0.208		210	0.005	3.15	0.216		340	0.008	7.20	0.216		450	0.011	7.20	0.191		625	0.013	7.20	0.217		865	0.021	9.20
	725	0.156		210	0.004	3.15	0.162		340	0.006	7.20	0.162		450	0.008	7.20	0.143		625	0.01	7.20	0.163		865	0.016	9.20
5 5 C	2900	0.522	5550	210	0.012	3.15	0.542	5347	340	0.020	7.20	0.542	5347	450	0.027	7.20	0.48	6046	625	0.033	7.20	0.544	5335	865	0.052	9.20
	1450	0.261		210	0.006	3.15	0.271		340	0.010	7.20	0.271		450	0.014	7.20	0.24		625	0.017	7.20	0.272		865	0.026	9.20
	960	0.173		210	0.004	3.15	0.180		340	0.007	7.20	0.18		450	0.009	7.20	0.159		625	0.011	7.20	0.18		865	0.017	9.20
	725	0.13		210	0.003	3.15	0.135		340	0.005	7.20	0.135		450	0.007	7.20	0.119		625	0.008	7.20	0.135		865	0.013	9.20
6 5 C	2900	0.449	6452	203	0.01	3.15	0.443	6553	340	0.017	7.20	0.443	6553	450	0.022	7.20	0.438	6620	625	0.03	7.20	0.453	6403	865	0.043	9.20
	1450	0.225		203	0.005	3.15	0.221		340	0.008	7.20	0.221		450	0.011	7.20	0.219		625	0.015	7.20	0.226		865	0.022	9.20
	960	0.149		203	0.003	3.15	0.146		340	0.006	7.20	0.146		450	0.007	7.20	0.145		625	0.01	7.20	0.15		865	0.014	9.20
	725	0.112		203	0.003	3.15	0.110		340	0.004	7.20	0.11		450	0.006	7.20	0.109		625	0.008	7.20	0.112		865	0.011	9.20
7 4 C	2900	0.392	7396	203	0.009	3.15	0.386	7511	340	0.014	7.20	0.386	7511	450	0.019	7.20	0.382	7588	625	0.026	7.20	0.395	7339	865	0.038	9.20
	1450	0.196		203	0.004	3.15	0.193		340	0.007	7.20	0.193		450	0.01	7.20	0.191		625	0.013	7.20	0.198		865	0.019	9.20
	960	0.13		203	0.003	3.15	0.128		340	0.005	7.20	0.128		450	0.006	7.20	0.127		625	0.009	7.20	0.131		865	0.013	9.20
	725	0.097		203	0.002	3.15	0.096		340	0.004	7.20	0.096		450	0.005	7.20	0.095		625	0.007	7.20	0.098		865	0.009	9.20
8 4 C	2900	0.345	8394	203	0.008	3.15	0.346	8372	340	0.013	7.20	0.346	8372	380	0.015	7.20	0.336	8624	625	0.023	7.20	0.343	8443	725	0.027	9.20
	1450	0.173		203	0.004	3.15	0.173		340	0.007	7.20	0.173		380	0.007	7.20	0.168		625	0.012	7.20	0.172		725	0.014	9.20
	960	0.114		203	0.003	3.15	0.115		340	0.004	7.20	0.115		380	0.005	7.20	0.111		625	0.008	7.20	0.114		725	0.009	9.20
	725	0.086		203	0.002	3.15	0.086		340	0.003	7.20	0.086		380	0.004	7.20	0.083		625	0.006	7.20	0.085		725	0.007	9.20
9 5 C	2900	0.304	9540	203	0.007	3.15	0.305	9514	340	0.011	7.20	0.305	9514	380	0.013	7.20	0.312	9300	620	0.021	7.20	0.302	9596	725	0.024	9.20
	1450	0.152		203	0.003	3.15	0.152		340	0.006	7.20	0.152		380	0.006	7.20	0.156		620	0.011	7.20	0.151		725	0.012	9.20
	960	0.101		203	0.002	3.15	0.101		340	0.004	7.20	0.101		380	0.004	7.20	0.103		620	0.007	7.20	0.1		725	0.008	9.20
	725	0.075		203	0.002	3.15	0.076		340	0.003	7.20	0.076		380	0.003	7.20	0.077		620	0.005	7.20	0.075		725	0.006	9.20
1 0 K	2900	0.267	10845	203	0.006	3.15	0.272	10670	270	0.008	7.20	0.272	10670	270	0.008	7.20	0.274	10569	620	0.019	7.20	0.272	10662	725	0.022	9.20
	1450	0.134		203	0.003	3.15	0.136		270	0.004	7.20	0.136		270	0.004	7.20	0.137		620	0.009	7.20	0.136		725	0.011	9.20
	960	0.089		203	0.002	3.15	0.090		270	0.003	7.20	0.09		270	0.003	7.20	0.091		620	0.006	7.20	0.09		725	0.007	9.20
	725	0.066		203	0.002	3.15	0.067		270	0.002	7.20	0.067		270	0.002	7.20	0.068		620	0.005	7.20	0.068		725	0.005	9.20

QUINTUPLE REDUCTION RATINGS
SIZES M08 - M14

0102

Pm	-	Input Power	(kW)	*N2*	-	Output Speed	(rpm)
M2	-	Output Torque	(Nm)	fra	-	Overhung Load	(kN)
i	-	Exact Ratio	(:1)				

QUINTUPLE REDUCTION

Column Entry	Input Speed	M0852					M0951					M1051					M1351					M1451				
6 7 8	N1 (rpm)	N2 (rpm)	i (:1)	M2 (Nm)	Pm (kW)	fra (kN)	N2 (rpm)	i (:1)	M2 (Nm)	Pm (kW)	fra (kN)	N2 (rpm)	i (:1)	M2 (Nm)	Pm (kW)	fra (kN)	N2 (rpm)	i (:1)	M2 (Nm)	Pm (kW)	fra (kN)	N2 (rpm)	i (:1)	M2 (Nm)	Pm (kW)	fra (kN)
2 7 C	2900	1.063	2728	1700	0.199	16.20	1.116	2598	2860	0.352	28.0	1.186	2446	4410	0.576	40.0	1.144	2536	6350	0.801	64.0	1.057	2744	10700	1.246	79.0
	1450	0.531		1700	0.101	16.20	0.558		2860	0.178	28.0	0.593		4410	0.291	40.0	0.572		6350	0.405	64.0	0.528		10700	0.63	79.0
	960	0.352		1700	0.07	16.20	0.370		2860	0.12	28.0	0.393		4410	0.19	40.0	0.379		6350	0.27	64.0	0.350		10700	0.42	79.0
	725	0.264		1700	0.05	16.20	0.277		2860	0.088	28.0	0.294		4410	0.145	40.0	0.284		6350	0.201	64.0	0.262		10700	0.313	79.0
3 2 C	2900	0.886	3274	1700	0.166	16.20	0.93	3119	2860	0.293	28.0	0.956	3035	4410	0.464	40.0	0.922	3146	6350	0.645	64.0	0.852	3405	10700	1.005	79.0
	1450	0.443		1700	0.084	16.20	0.465		2860	0.148	28.0	0.478		4410	0.235	40.0	0.461		6350	0.326	64.0	0.426		10700	0.508	79.0
	960	0.293		1700	0.056	16.20	0.308		2860	0.10	28.0	0.316		4410	0.16	40.0	0.305		6350	0.22	64.0	0.282		10700	0.34	79.0
	725	0.22		1700	0.042	16.20	0.231		2860	0.074	28.0	0.237		4410	0.117	40.0	0.229		6350	0.162	64.0	0.211		10700	0.252	79.0
3 6 C	2900	0.76	3818	1700	0.142	16.20	0.775	3742	2860	0.244	28.0	0.81	3579	4410	0.394	40.0	0.782	3710	6350	0.547	64.0	0.722	4015	10700	0.852	79.0
	1450	0.38		1700	0.072	16.20	0.387		2860	0.123	28.0	0.405		4410	0.199	40.0	0.391		6350	0.276	64.0	0.361		10700	0.43	79.0
	960	0.251		1700	0.048	16.20	0.257		2860	0.082	28.0	0.268		4410	0.13	40.0	0.259		6350	0.18	64.0	0.239		10700	0.29	79.0
	725	0.189		1700	0.036	16.20	0.192		2860	0.061	28.0	0.201		4410	0.099	40.0	0.194		6350	0.137	64.0	0.179		10700	0.214	79.0
4 0 C	2900	0.674	4302	1700	0.126	16.20	0.688	4216	2860	0.217	28.0	0.74	3919	4410	0.36	40.0	0.714	4062	6350	0.5	64.0	0.66	4396	10700	0.778	79.0
	1450	0.337		1700	0.064	16.20	0.344		2860	0.11	28.0	0.37		4410	0.182	40.0	0.357		6350	0.252	64.0	0.33		10700	0.393	79.0
	960	0.223		1700	0.042	16.20	0.228		2860	0.073	28.0	0.245		4410	0.12	40.0	0.236		6350	0.17	64.0	0.218		10700	0.26	79.0
	725	0.167		1700	0.032	16.20	0.171		2860	0.054	28.0	0.184		4410	0.09	40.0	0.177		6350	0.125	64.0	0.164		10700	0.195	79.0
4 6 C	2900	0.614	4726	1700	0.115	16.20	0.623	4655	2860	0.196	28.0	0.642	4515	4410	0.312	40.0	0.641	4525	6350	0.449	64.0	0.584	4969	10100	0.65	79.0
	1450	0.307		1700	0.058	16.20	0.311		2860	0.099	28.0	0.321		4410	0.158	40.0	0.32		6350	0.227	64.0	0.292		10100	0.328	79.0
	960	0.203		1700	0.038	16.20	0.206		2860	0.066	28.0	0.213		4410	0.10	40.0	0.212		6350	0.15	64.0	0.193		10100	0.22	79.0
	725	0.152		1700	0.029	16.20	0.155		2860	0.049	28.0	0.159		4410	0.078	40.0	0.159		6350	0.113	64.0	0.145		10100	0.163	79.0
5 5 C	2900	0.528	5494	1700	0.099	16.20	0.536	5411	2860	0.169	28.0	0.524	5533	4410	0.255	40.0	0.523	5545	6350	0.366	64.0	0.533	5441	10100	0.593	79.0
	1450	0.264		1700	0.05	16.20	0.268		2860	0.085	28.0	0.262		4410	0.129	40.0	0.261		6350	0.185	64.0	0.267		10100	0.3	79.0
	960	0.175		1700	0.033	16.20	0.177		2860	0.057	28.0	0.174		4410	0.085	40.0	0.173		6350	0.12	64.0	0.176		10100	0.20	79.0
	725	0.131		1700	0.025	16.20	0.133		2860	0.042	28.0	0.13		4410	0.064	40.0	0.13		6350	0.092	64.0	0.132		10100	0.149	79.0
6 5 C	2900	0.431	6733	1700	0.081	16.20	0.43	6742	2480	0.118	28.0	0.475	6106	4260	0.223	40.0	0.428	6783	6350	0.299	64.0	0.435	6668	10100	0.484	79.0
	1450	0.215		1700	0.041	16.20	0.215		2480	0.059	28.0	0.237		4260	0.113	40.0	0.214		6350	0.151	64.0	0.217		10100	0.245	79.0
	960	0.143		1700	0.027	16.20	0.142		2480	0.039	28.0	0.157		4260	0.075	40.0	0.142		6350	0.10	64.0	0.144		10100	0.16	79.0
	725	0.107		1700	0.02	16.20	0.107		2480	0.03	28.0	0.118		4260	0.056	40.0	0.106		6350	0.075	64.0	0.108		10100	0.121	79.0
7 4 C	2900	0.38	7641	1700	0.071	16.20	0.379	7652	2480	0.104	28.0	0.388	7483	4260	0.182	40.0	0.384	7561	6350	0.268	64.0	0.39	7432	10100	0.434	79.0
	1450	0.19		1700	0.036	16.20	0.189		2480	0.052	28.0	0.194		4260	0.092	40.0	0.192		6350	0.136	64.0	0.195		10100	0.22	79.0
	960	0.126		1700	0.024	16.20	0.125		2480	0.035	28.0	0.128		4260	0.061	40.0	0.127		6350	0.090	64.0	0.129		10100	0.15	79.0
	725	0.094		1700	0.018	16.20	0.094		2480	0.026	28.0	0.096		4260	0.046	40.0	0.095		6350	0.067	64.0	0.097		10100	0.109	79.0
8 4 C	2900	0.348	8344	1700	0.065	16.20	0.343	8449	2860	0.108	28.0	0.348	8340	4260	0.163	40.0	0.342	8479	6350	0.239	64.0	0.348	8335	10100	0.387	79.0
	1450	0.174		1700	0.033	16.20	0.172		2860	0.055	28.0	0.174		4260	0.083	40.0	0.171		6350	0.121	64.0	0.174		10100	0.196	79.0
	960	0.115		1700	0.022	16.20	0.114		2860	0.036	28.0	0.115		4260	0.055	40.0	0.113		6350	0.080	64.0	0.115		10100	0.13	79.0
	725	0.086		1700	0.016	16.20	0.085		2860	0.027	28.0	0.086		4260	0.041	40.0	0.085		6350	0.06	64.0	0.086		10100	0.097	79.0
9 5 C	2900	0.306	9486	1700	0.057	16.20	0.302	9605	2860	0.095	28.0	0.31	9354	4260	0.146	40.0	0.306	9490	5700	0.192	64.0	0.285	10192	9280	0.291	79.0
	1450	0.153		1700	0.029	16.20	0.151		2860	0.048	28.0	0.155		4260	0.074	40.0	0.153		5700	0.097	64.0	0.142		9280	0.147	79.0
	960	0.101		1700	0.019	16.20	0.100		2860	0.032	28.0	0.103		4260	0.049	40.0	0.101		5700	0.064	64.0	0.094		9280	0.10	79.0
	725	0.076		1700	0.014	16.20	0.075		2860	0.024	28.0	0.077		4260	0.037	40.0	0.076		5700	0.048	64.0	0.071		9280	0.073	79.0
1 0 K	2900	0.265	10924	1550	0.045	16.20	0.242	11966	2480	0.066	28.0	0.289	10048	4230	0.135	40.0	0.287	10097	6030	0.191	64.0	0.254	11430	9280	0.26	79.0
	1450	0.133		1550	0.023	16.20	0.121		2480	0.033	28.0	0.144		4230	0.068	40.0	0.144		6030	0.096	64.0	0.127		9280	0.131	79.0
	960	0.088		1550	0.015	16.20	0.080		2480	0.022	28.0	0.096		4230	0.045	40.0	0.095		6030	0.064	64.0	0.084		9280	0.087	79.0
	725	0.066		1550	0.011	16.20	0.06		2480	0.017	28.0	0.072		4230	0.034	40.0	0.071		6030	0.048	64.0	0.063		9280	0.065	79.0

DIMENSIONS - SINGLE REDUCTION BASE MOUNT

0106

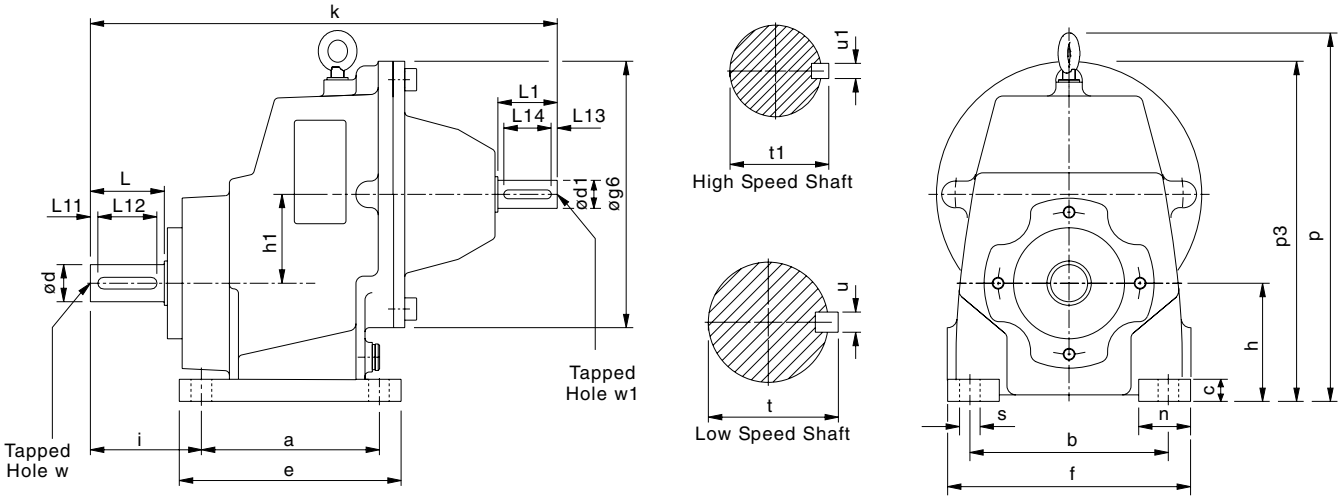

SIZE	a	b	c	e	f	g6	h	h1	i	k	n	p	p3	s
M0512	110	125	17	137	152	140	63	47	56	271	27	218	180	11
M0612	120	135	20	150	170	180	80	60	75	316	35	258	230	14
M0712	150	170	25	190	212	212	90	74	85	362	42	306	270	17.5
M0812	160	215	30	206	265	250	100	97	110	449	60	352	322	17.5

SIZE	High Speed Shaft							Low Speed Shaft						
	d1	L1	L13	L14	t1	u1	w1	d	L	L11	L12	t	u	w
M0512	16	40	4	32	18	5	M5 x 0.8 12 deep	20 k6	40	4	32	22.5	6	M6 x 1 16 deep
M0612	19	40	4	32	21.5	6	M6 x 1.0 16 deep	25 k6	50	5	40	28	8	M10 x 1.5 22 deep
M0712	24	50	5	40	27	8	M8 x 1.25 19 deep	30 k6	60	5	50	33	8	M10 x 1.5 22 deep
M0812	28	60	5	50	31	8	M10 x 1.5 22 deep	40 k6	80	5	70	43	12	M16 x 2.0 36 deep

all parallel keys are to DIN 6885

DIMENSIONS - DOUBLE REDUCTION BASE MOUNT

0110

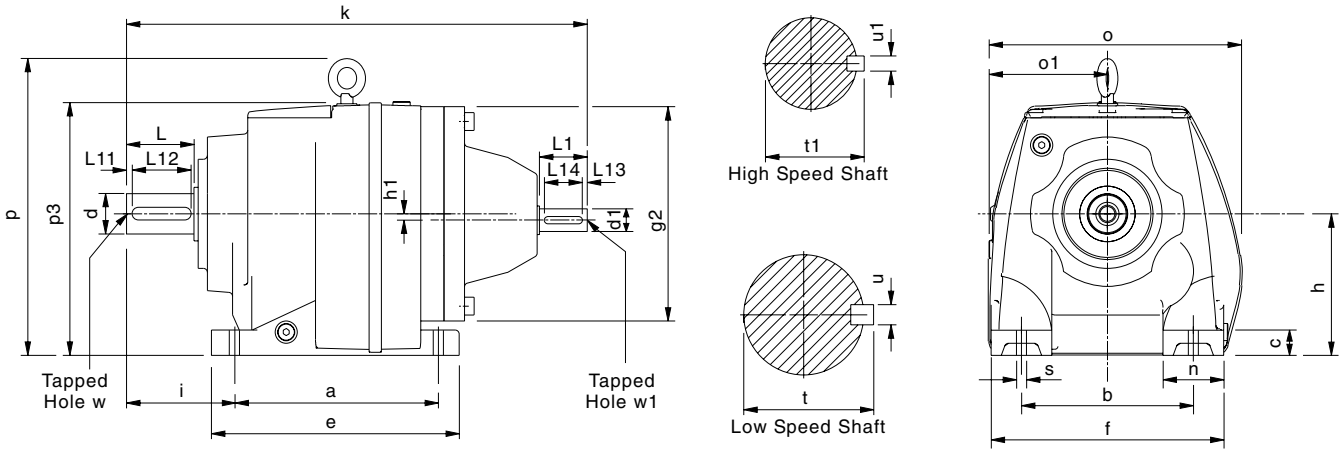

SIZE	a	b	c	e	f	g2	h	h1	i	k	n	o	o1	p	p3	s
M0122	110	110	12	131	135	140	75	-	58	286	25	152	76	-	149	10
M0222	130	110	16	152	145	140	90	-	75	317	35	170	84	-	180	10
M0322	130	110	16	152	145	140	90	-	75	317	35	170	84	-	180	10
M0422	165	135	20	200	190	180	115	-	90	369	55	204	97	-	208	15
M0522	165	135	20	200	190	180	115	-	100	379	55	204	97	-	208	15
M0622	195	150	24	235	210	180	130	14.5	100	400	60	220	110	246	214	15
M0722	205	170	25	245	230	212	140	-	115	440	60	252	119	295	250	19
M0822	260	215	35	310	290	250	180	-	140	555	75	320	167	360	310	19
M0921	310	250	40	365	340	300	225	-	160	660	90	372	200	433	394	23
M1021	370	290	45	440	400	360	250	-	185	782	110	428	225	505	446	27
M1321	410	340	50	490	450	400	265	-	220	907	110	470	242	563	483	34
M1421	500	380	50	590	530	460	300	-	260	1022	150	546	278	630	551	41

SIZE	High Speed Shaft							Low Speed Shaft						
	d1	L1	L13	L14	t1	u1	w1	d	L	L11	L12	t	u	w
M0122	16 k6	40	4	32	18	5	M5 x 0.8 12 deep	20 k6	40	4	32	22.5	6	M6 x 1 16 deep
M0222	16 k6	40	4	32	18	5	M5 x 0.8 12 deep	25 k6	50	4	40	28	8	M10 x 1.5 22 deep
M0322	16 k6	40	4	32	18	5	M5 x 0.8 12 deep	25 k6	50	4	40	28	8	M10 x 1.5 22 deep
M0422	19 k6	40	4	32	21.5	6	M6 x 1.0 16 deep	30 k6	60	4	50	33	8	M10 x 1.5 22 deep
M0522	19 k6	40	4	32	21.5	6	M6 x 1.0 16 deep	35 k6	70	7	60	38	10	M12 x 1.75 28 deep
M0622	19 k6	40	4	32	21.5	6	M6 x 1.0 16 deep	35 k6	70	7	60	38	10	M12 x 1.75 28 deep
M0722	24 k6	50	5	40	27	8	M8 x 1.25 19 deep	40 k6	80	5	70	43	12	M16 x 2.0 36 deep
M0822	28 k6	60	5	50	31	8	M10 x 1.5 22 deep	50 k6	100	10	80	53.5	14	M16 x 2.0 36 deep
M0921	38 k6	80	5	70	41	10	M12 x 1.75 28 deep	60 m6	120	10	100	64	18	M20 x 2.5 42 deep
M1021	42 k6	110	10	70	45	12	M16 x 2.0 36 deep	70 m6	140	15	110	74.5	20	M20 x 2.5 42 deep
M1321	55 m6	110	10	90	59	16	M20 x 2.5 42 deep	90 m6	170	15	140	95	25	M24 x 3.0 50 deep
M1421	55 m6	110	10	90	59	16	M20 x 2.5 42 deep	100 m6	210	15	180	106	28	M24 x 3.0 50 deep

all parallel keys are to DIN 6885

DIMENSIONS - TRIPLE REDUCTION BASE MOUNT

0110

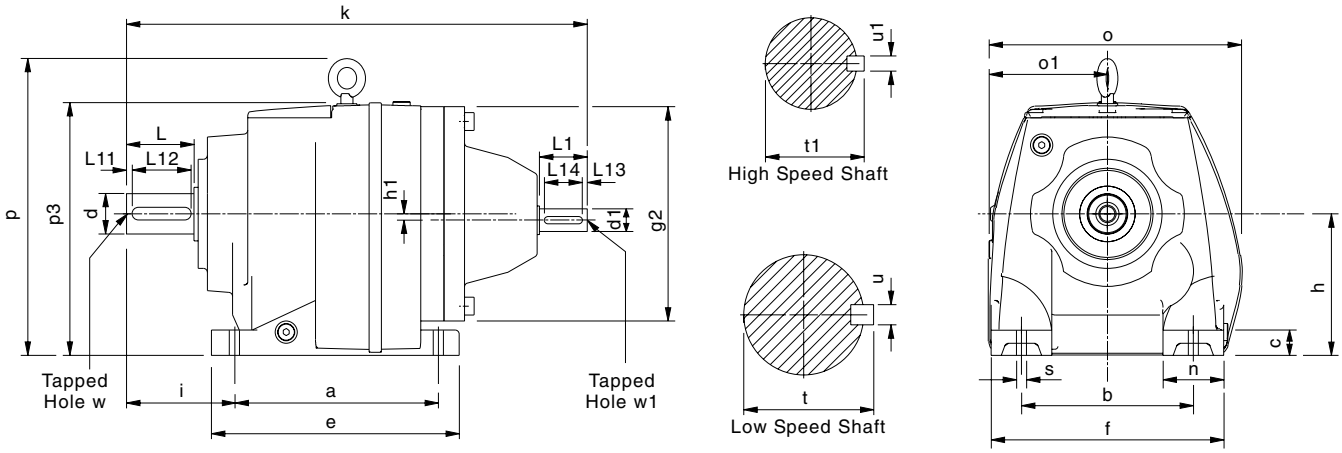

SIZE	a	b	c	e	f	g2	h	h1	i	k	n	o	o1	p	p3	s
M0132	110	110	12	131	135	140	75	-	58	301	25	152	76	-	149	10
M0232	130	110	16	152	145	140	90	-	75	330	35	170	84	-	180	10
M0332	130	110	16	152	145	140	90	-	75	330	35	170	84	-	180	10
M0432	165	135	20	200	190	180	115	-	90	377	55	204	97	-	208	15
M0532	165	135	20	200	190	180	115	-	100	387	55	204	97	-	208	15
M0632	195	150	24	235	210	180	130	14.5	100	408	60	220	110	246	214	15
M0732	205	170	25	245	230	212	140	-	115	452	60	252	119	295	250	19
M0832	260	215	35	310	290	250	180	-	140	540	75	320	167	360	310	19
M0931	310	250	40	365	340	250	225	-	160	662	90	372	200	433	394	23
M1031	370	290	45	440	400	300	250	-	185	784	110	428	225	505	446	27
M1331	410	340	50	490	450	400	265	-	220	969	110	470	242	563	483	34
M1431	500	380	50	590	530	460	300	-	260	1094	150	546	278	630	551	41

SIZE	High Speed Shaft							Low Speed Shaft						
	d1	L1	L13	L14	t1	u1	w1	d	L	L11	L12	t	u	w
M0132	16 k6	40	4	32	18	5	M5 x 0.8 12 deep	20 k6	40	4	32	22.5	6	M6 x 1 16 deep
M0232	16 k6	40	4	32	18	5	M5 x 0.8 12 deep	25 k6	50	4	40	28	8	M10 x 1.5 22 deep
M0332	16 k6	40	4	32	18	5	M5 x 0.8 12 deep	25 k6	50	4	40	28	8	M10 x 1.5 22 deep
M0432	16 k6	40	4	32	18	5	M5 x 0.8 12 deep	30 k6	60	4	50	33	8	M10 x 1.5 22 deep
M0532	16 k6	40	4	32	18	5	M5 x 0.8 12 deep	35 k6	70	7	60	38	10	M12 x 1.75 28 deep
M0632	16 k6	40	4	32	18	5	M5 x 0.8 12 deep	35 k6	70	7	60	38	10	M12 x 1.75 28 deep
M0732	19 k6	40	4	32	21.5	6	M6 x 1.0 16 deep	40 k6	80	5	70	43	12	M16 x 2.0 36 deep
M0832	24 k6	50	5	40	27	8	M8 x 1.25 19 deep	50 k6	100	10	80	53.5	14	M16 x 2.0 36 deep
M0931	28 k6	60	5	50	31	8	M10 x 1.5 22 deep	60 m6	120	10	100	64	18	M20 x 2.5 42 deep
M1031	38 k6	80	5	70	41	10	M12 x 1.75 28 deep	70 m6	140	15	110	74.5	20	M20 x 2.5 42 deep
M1331	55 m6	110	10	90	59	16	M20 x 2.5 42 deep	90 m6	170	15	140	95	25	M24 x 3.0 50 deep
M1431	55 m6	110	10	90	59	16	M20 x 2.5 42 deep	100 m6	210	15	180	106	28	M24 x 3.0 50 deep

all parallel keys are to DIN 6885

DIMENSIONS - QUADRUPLE REDUCTION BASE MOUNT

0206

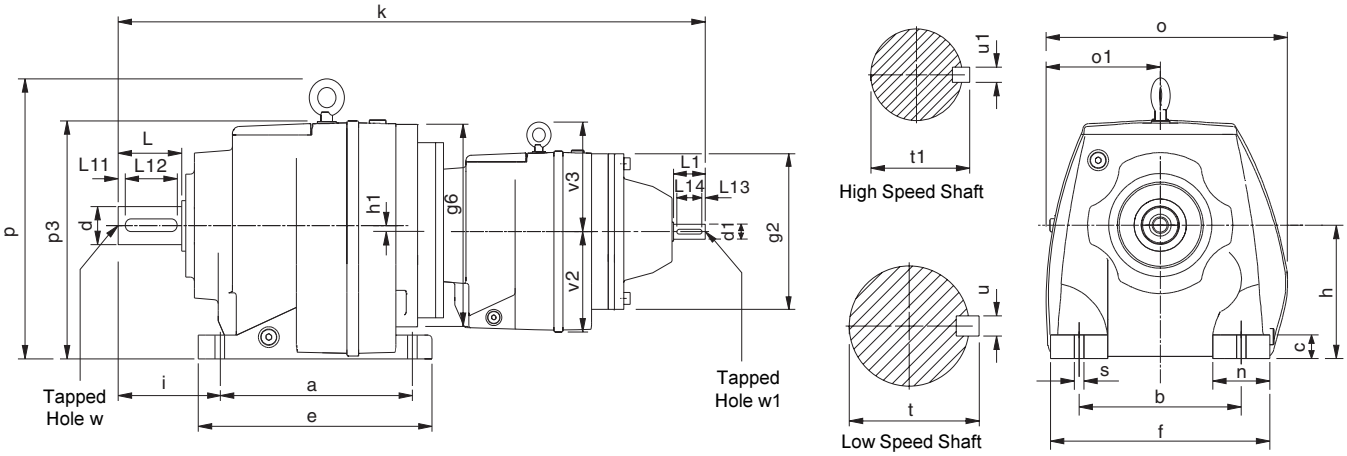

SIZE	a	b	c	e	f	g2	g6	h	h1	i	k	n	o	o1	p	p3	s	v2	v3
M0342	130	110	16	152	145	140	140	90	-	75	503	35	170	84	-	180	10	76	-
M0442	165	135	20	200	190	140	180	115	-	90	571	55	204	97	-	208	15	91	-
M0542	165	135	20	200	190	140	180	115	-	100	581	55	204	97	-	208	15	91	-
M0642	195	150	24	235	210	140	180	130	14.5	100	602	60	220	110	246	214	15	91	-
M0742	205	170	25	245	230	140	212	140	-	115	639	60	252	119	295	250	19	91	-
M0842	260	215	35	310	290	180	250	180	-	140	751	75	320	167	360	310	19	115	-
M0941	310	250	40	365	340	180	250	225	-	160	832	90	372	200	433	394	23	113	-
M1041	370	290	45	440	400	180	300	250	-	185	956	110	428	225	505	446	27	138	155
M1341	410	340	50	490	450	212	350	265	-	220	1077	110	470	242	563	483	34	187	155
M1441	500	380	50	590	530	212	350	300	-	260	1192	150	546	278	630	551	41	187	155

SIZE	High Speed Shaft							Low Speed Shaft						
	d1	L1	L13	L14	t1	u1	w1	d	L	L11	L12	t	u	w
M0342	16 k6	40	4	32	18	5	M5 x 0.8 12 deep	25 k6	50	4	40	28	8	M10 x 1.5 22 deep
M0442	16 k6	40	4	32	18	5	M5 x 0.8 12 deep	30 k6	60	4	50	33	8	M10 x 1.5 22 deep
M0542	16 k6	40	4	32	18	5	M5 x 0.8 12 deep	35 k6	70	7	60	38	10	M12 x 1.75 28 deep
M0642	16 k6	40	4	32	18	5	M5 x 0.8 12 deep	35 k6	70	7	60	38	10	M12 x 1.75 28 deep
M0742	16 k6	40	4	32	18	5	M5 x 0.8 12 deep	40 k6	80	5	70	43	12	M16 x 2.0 36 deep
M0842	19 k6	40	4	32	21.5	6	M6 x 1.0 16 deep	50 k6	100	10	80	53.5	14	M16 x 2.0 36 deep
M0941	19 k6	40	4	32	21.5	6	M6 x 1.0 16 deep	60 m6	120	10	100	64	18	M20 x 2.5 42 deep
M1041	24 k6	50	5	40	27	8	M8 x 1.25 19 deep	70 m6	140	15	110	74.5	20	M20 x 2.5 42 deep
M1341	24 k6	50	5	40	27	8	M8 x 1.25 19 deep	90 m6	170	15	140	95	25	M24 x 3.0 50 deep
M1441	24 k6	50	5	40	27	8	M8 x 1.25 19 deep	100 m6	210	15	180	106	28	M24 x 3.0 50 deep

all parallel keys are to DIN 6885

DIMENSIONS - QUINTUPLE REDUCTION BASE MOUNT

0206

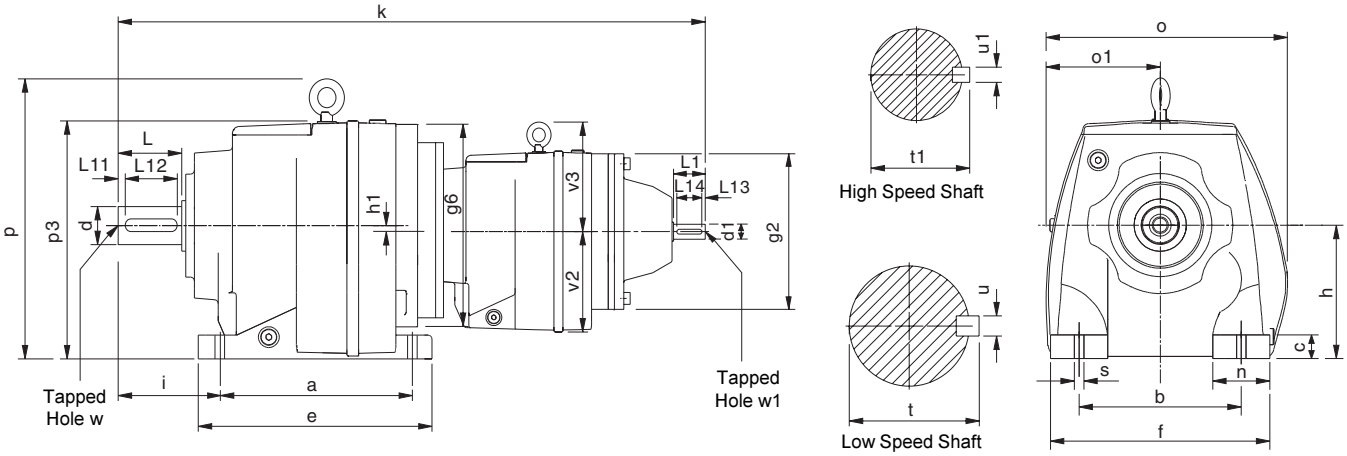

SIZE	a	b	c	e	f	g2	g6	h	h1	i	k	n	o	o1	p	p3	s	v2	v3
M0352	130	110	16	152	145	140	140	90	-	75	518	35	170	84	-	180	10	76	-
M0452	165	135	20	200	190	140	180	115	-	90	584	55	204	97	-	208	15	91	-
M0552	165	135	20	200	190	140	180	115	-	100	594	55	204	97	-	208	15	91	-
M0652	195	150	24	235	210	140	180	130	14.5	100	615	60	220	110	246	214	15	91	-
M0752	205	170	25	245	230	140	212	140	-	115	651	60	252	119	295	250	19	91	-
M0852	260	215	35	310	290	180	250	180	-	140	759	75	320	167	360	310	19	115	-
M0951	310	250	40	365	340	180	250	225	-	160	840	90	372	200	433	394	23	113	-
M1051	370	290	45	440	400	180	300	250	-	185	968	110	428	225	505	446	27	138	155
M1351	410	340	50	490	450	212	350	265	-	220	1089	110	470	242	563	483	34	187	155
M1451	500	380	50	590	530	212	350	300	-	260	1204	150	546	278	630	551	41	187	155

SIZE	High Speed Shaft							Low Speed Shaft						
	d1	L1	L13	L14	t1	u1	w1	d	L	L11	L12	t	u	w
M0352	16 k6	40	4	32	18	5	M5 x 0.8 12 deep	25 k6	50	4	40	28	8	M10 x 1.5 22 deep
M0452	16 k6	40	4	32	18	5	M5 x 0.8 12 deep	30 k6	60	4	50	33	8	M10 x 1.5 22 deep
M0552	16 k6	40	4	32	18	5	M5 x 0.8 12 deep	35 k6	70	7	60	38	10	M12 x 1.75 28 deep
M0652	16 k6	40	4	32	18	5	M5 x 0.8 12 deep	35 k6	70	7	60	38	10	M12 x 1.75 28 deep
M0752	16 k6	40	4	32	18	5	M5 x 0.8 12 deep	40 k6	80	5	70	43	12	M16 x 2.0 36 deep
M0852	16 k6	40	4	32	18	5	M5 x 0.8 12 deep	50 k6	100	10	80	53.5	14	M16 x 2.0 36 deep
M0951	16 k6	40	4	32	18	5	M5 x 0.8 12 deep	60 m6	120	10	100	64	18	M20 x 2.5 42 deep
M1051	19 k6	40	4	32	21.5	6	M6 x 1.0 16 deep	70 m6	140	15	110	74.5	20	M20 x 2.5 42 deep
M1351	19 k6	40	4	32	21.5	6	M6 x 1.0 16 deep	90 m6	170	15	140	95	25	M24 x 3.0 50 deep
M1451	19 k6	40	4	32	21.5	6	M6 x 1.0 16 deep	100 m6	210	15	180	106	28	M24 x 3.0 50 deep

all parallel keys are to DIN 6885

DIMENSIONS - SINGLE REDUCTION FLANGE MOUNT

0106

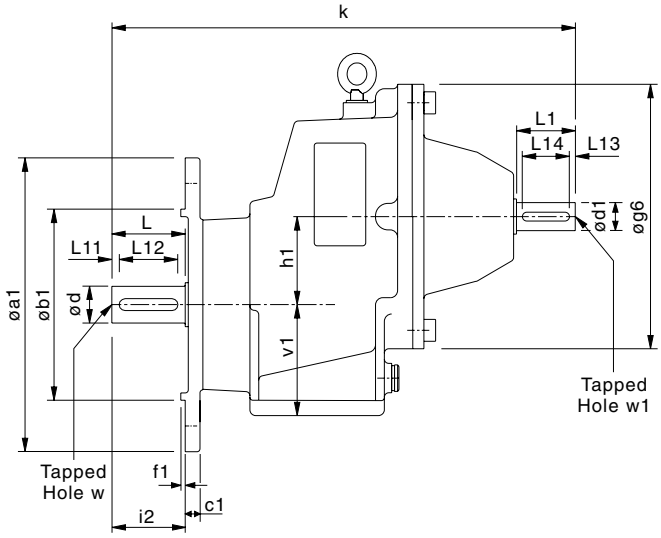

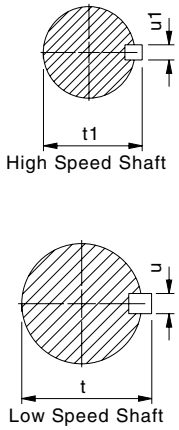

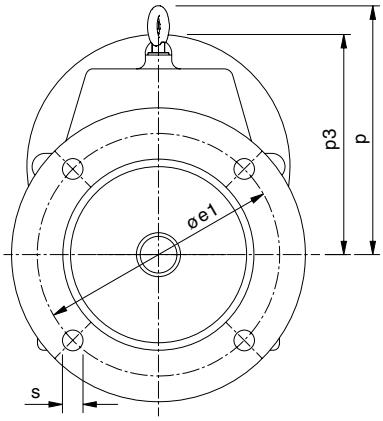

Note: Units are also available as C-Flange (B14) Mounting or Base and C-Flange (B14) Mounting, please see page 117 for details

SIZE	øa1	øb1	c1	øe1	f1	øg6	h1	i2	k	p	p3	s	v1
M0512	120	80	9	100	3	140	47	40	271	155	117	9	56
	140	95	9	115	3			40				9	
	160	110	10	130	3.5			40				9	
	200	130	10	165	3.5			40				12	
M0612	120	80	10	100	3	180	60	50	316	178	150	6.6	72
	140	95	10	115	3			50				9	
	160	110	10	130	3.5			50				9	
	200	130	10	165	3.5			50				11	
M0712	140	95	10	115	3	212	74	60	362	216	180	9	83
	160	110	10	130	3.5			60				9	
	200	130	11	165	4			60				11	
	250	180	11	215	4			60				13.5	
M0812	200	130	11	165	3.5	250	97	80	449	252	220	11	97
	250	180	11	215	4			80				13.5	
	300	230	11	265	4			80				13.5	

SIZE	High Speed Shaft							Low Speed Shaft						
	d1	L1	L13	L14	t1	u1	w1	d	L	L11	L12	t	u	w
M0512	16	40	4	32	18	5	M5 x 0.8 12 deep	20 k6	40	4	32	22.5	6	M6 x 1 16 deep
M0612	19	40	4	32	21.5	6	M6 x 1.0 16 deep	25 k6	50	5	40	28	8	M10 x 1.5 22 deep
M0712	24	50	5	40	27	8	M8 x 1.25 19 deep	30 k6	60	5	50	33	8	M10 x 1.5 22 deep
M0812	28	60	5	50	31	8	M10 x 1.5 22 deep	40 k6	80	5	70	43	12	M16 x 2.0 36 deep

all parallel keys are to DIN 6885

DIMENSIONS - DOUBLE REDUCTION FLANGE MOUNT

0110

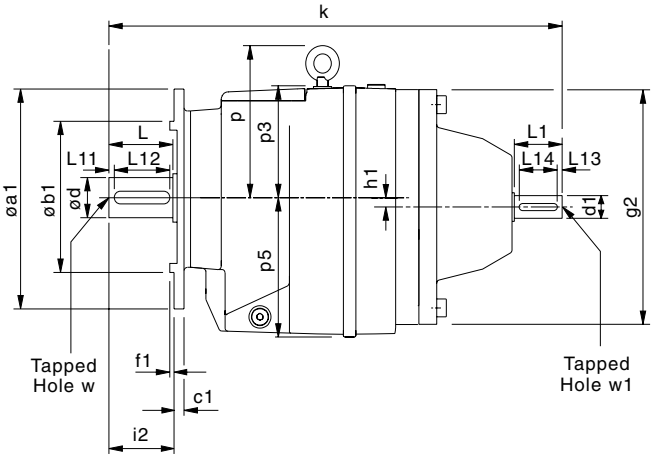

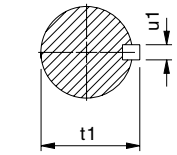

High Speed Shaft

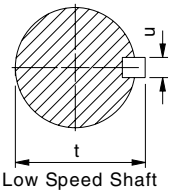

Low Speed Shaft

Sizes 1, 2, 3, 4, 5, 6, 7 and 8

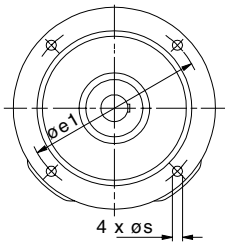

Sizes 9, 10, 13 and 14

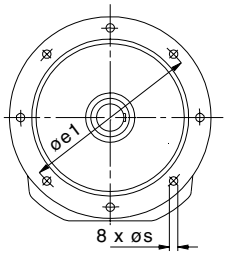

Note: Sizes 01 to 08 are also available as C-Flange (B14) Mounting, please see page 117 for details.

SIZE	øa1	øb1	c1	øe1	f1	øg2	h1	i2	k	p	p3	p5	s
M0122	120	80	9	100	3	140	-	40	286	-	74	76	9
	140	95	9	115	3			40					9
	160	110	10	130	3.5			40					9
	200	130	10	165	3.5			40					11
M0222	120	80	10	100	3	140	-	50	317	-	90	91	6.6
	140	95	10	115	3			50					9
	160	110	10	130	3.5			50					9
	200	130	10	165	3.5			50					11
M0322	120	80	10	100	3	140	-	50	317	-	90	91	6.6
	140	95	10	115	3			50					9
	160	110	10	130	3.5			50					9
	200	130	10	165	3.5			50					11
M0422	140	95	11	115	3	180	-	60	369	-	93	115	9
	160	110	11	130	3.5			60					9
	200	130	11	165	3.5			60					11
	250	180	11	215	4			60					13.5
M0522	140	95	11	115	3	180	-	70	379	-	93	115	9
	160	110	11	130	3.5			70					9
	200	130	11	165	3.5			70					11
	250	180	11	215	4			70					13.5
M0622	200	130	11	165	4	180	14.5	70	400	116	84	130	11
	250	180	11	215	4			70					13.5
	300	230	11	265	4			70					13.5
M0722	200	130	11	165	3.5	212	-	80	440	155	110	140	11
	250	180	11	215	4			80					13.5
	300	230	11	265	4			80					13.5
M0822	300	230	17	265	4	250	-	100	555	180	130	182	13.5
	350	250	17	300	5			100					17.5
M0921	450	350	18	400	5	300	-	140	660	198	-	230	18
M1021	450	350	22	400	5	360	-	140	782	245	-	260	18
M1321	550	450	25	500	5	400	-	170	907	288	-	278	18
M1421	550	450	25	500	5	460	-	210	1022	320	-	318	18

SIZE	High Speed Shaft							Low Speed Shaft						
	d1	L1	L13	L14	t1	u1	w1	d	L	L11	L12	t	u	w
M0122	16 k6	40	4	32	18	5	M5 x 0.8 12 deep	20 k6	40	4	32	22.5	6	M6 x 1 16 deep
M0222	16 k6	40	4	32	18	5	M5 x 0.8 12 deep	25 k6	50	4	40	28	8	M10 x 1.5 22 deep
M0322	16 k6	40	4	32	18	5	M5 x 0.8 12 deep	25 k6	50	4	40	28	8	M10 x 1.5 22 deep
M0422	19 k6	40	4	32	21.5	6	M6 x 1.0 16 deep	30 k6	60	4	50	33	8	M10 x 1.5 22 deep
M0522	19 k6	40	4	32	21.5	6	M6 x 1.0 16 deep	35 k6	70	7	60	38	10	M12 x 1.75 28 deep
M0622	19 k6	40	4	32	21.5	6	M6 x 1.0 16 deep	35 k6	70	7	60	38	10	M12 x 1.75 28 deep
M0722	24 k6	50	5	40	27	8	M8 x 1.25 19 deep	40 k6	80	5	70	43	12	M16 x 2.0 36 deep
M0822	28 k6	60	5	50	31	8	M10 x 1.5 22 deep	50 k6	100	10	80	53.5	14	M16 x 2.0 36 deep
M0921	38 k6	80	5	70	41	10	M12 x 1.75 28 deep	60 m6	120	10	100	64	18	M20 x 2.5 42 deep
M1021	42 k6	110	10	70	45	12	M16 x 2.0 36 deep	70 m6	140	15	110	74.5	20	M20 x 2.5 42 deep
M1321	55 m6	110	10	90	59	16	M20 x 2.5 42 deep	90 m6	170	15	140	95	25	M24 x 3.0 50 deep
M1421	55 m6	110	10	90	59	16	M20 x 2.5 42 deep	100 m6	210	15	180	106	28	M24 x 3.0 50 deep

all parallel keys are to DIN 6885

DIMENSIONS - TRIPLE REDUCTION FLANGE MOUNT

0110

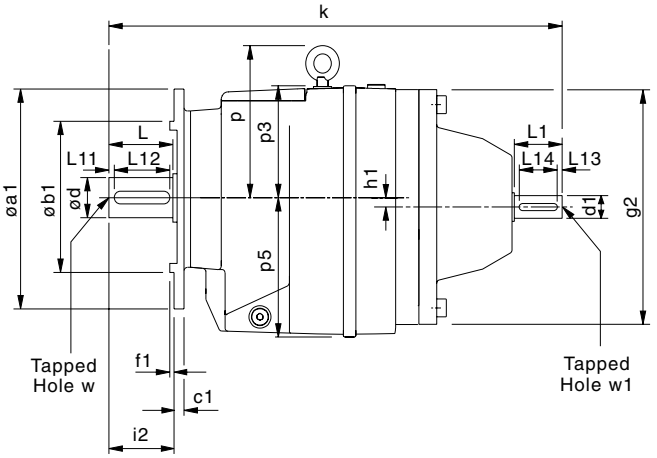

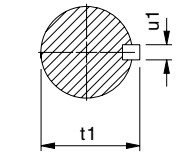

High Speed Shaft

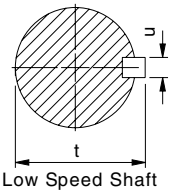

Low Speed Shaft

Sizes 1, 2, 3, 4, 5, 6, 7 and 8

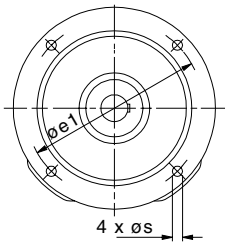

Sizes 9, 10, 13 and 14

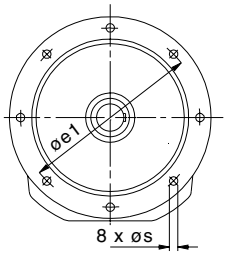

Note: Sizes 01 to 08 are also available as C-Flange (B14) Mounting, please see page 117 for details.

SIZE	øa1	øb1	c1	øe1	f1	øg2	h1	i2	k	p	p3	p5	s
M0132	120	80	9	100	3	140	-	40	301	-	74	76	9
	140	95	9	115	3			40					9
	160	110	10	130	3.5			40					9
	200	130	10	165	3.5			40					11
M0232	120	80	10	100	3	140	-	50	330	-	90	91	6.6
	140	95	10	115	3			50					9
	160	110	10	130	3.5			50					9
	200	130	10	165	3.5			50					11
M0332	120	80	10	100	3	140	-	50	330	-	90	91	6.6
	140	95	10	115	3			50					9
	160	110	10	130	3.5			50					9
	200	130	10	165	3.5			50					11
M0432	140	95	11	115	3	180	-	60	377	-	93	115	9
	160	110	11	130	3.5			60					9
	200	130	11	165	3.5			60					11
	250	180	11	215	4			60					13.5
M0532	140	95	11	115	3	180	-	70	387	-	93	115	9
	160	110	11	130	3.5			70					9
	200	130	11	165	3.5			70					11
	250	180	11	215	4			70					13.5
M0632	200	130	11	165	4	180	14.5	70	408	116	84	130	11
	250	180	11	215	4			70					13.5
	300	230	11	265	4			70					13.5
M0732	200	130	11	165	3.5	212	-	80	452	155	110	140	11
	250	180	11	215	4			80					13.5
	300	230	11	265	4			80					13.5
M0832	300	230	17	265	4	250	-	100	540	180	130	182	13.5
	350	250	17	300	5			100					17.5
M0931	450	350	18	400	5	300	-	140	662	198	-	230	18
M1031	450	350	22	400	5	360	-	140	784	245	-	260	18
M1331	550	450	25	500	5	400	-	170	969	288	-	278	18
M1431	550	450	25	500	5	460	-	210	1094	320	-	318	18

SIZE	High Speed Shaft							Low Speed Shaft						
	d1	L1	L13	L14	t1	u1	w1	d	L	L11	L12	t	u	w
M0132	16 k6	40	4	32	18	5	M5 x 0.8 12 deep	20 k6	40	4	32	22.5	6	M6 x 1 16 deep
M0232	16 k6	40	4	32	18	5	M5 x 0.8 12 deep	25 k6	50	4	40	28	8	M10 x 1.5 22 deep
M0332	16 k6	40	4	32	18	5	M5 x 0.8 12 deep	25 k6	50	4	40	28	8	M10 x 1.5 22 deep
M0432	16 k6	40	4	32	18	5	M5 x 0.8 12 deep	30 k6	60	4	50	33	8	M10 x 1.5 22 deep
M0532	16 k6	40	4	32	18	5	M5 x 0.8 12 deep	35 k6	70	7	60	38	10	M12 x 1.75 28 deep
M0632	16 k6	40	4	32	18	5	M5 x 0.8 12 deep	35 k6	70	7	60	38	10	M12 x 1.75 28 deep
M0732	19 k6	40	4	32	21.5	6	M6 x 1.0 16 deep	40 k6	80	5	70	43	12	M16 x 2.0 36 deep
M0832	24 k6	50	5	40	27	8	M8 x 1.25 19 deep	50 k6	100	10	80	53.5	14	M16 x 2.0 36 deep
M0931	28 k6	60	5	50	31	8	M10 x 1.5 22 deep	60 m6	120	10	100	64	18	M20 x 2.5 42 deep
M1031	38 k6	80	5	70	41	10	M12 x 1.75 28 deep	70 m6	140	15	110	74.5	20	M20 x 2.5 42 deep
M1331	55 m6	110	10	90	59	16	M20 x 2.5 42 deep	90 m6	170	15	140	95	25	M24 x 3.0 50 deep
M1431	55 m6	110	10	90	59	16	M20 x 2.5 42 deep	100 m6	210	15	180	106	28	M24 x 3.0 50 deep

all parallel keys are to DIN 6885

DIMENSIONS - QUADRUPLE REDUCTION FLANGE MOUNT

0206

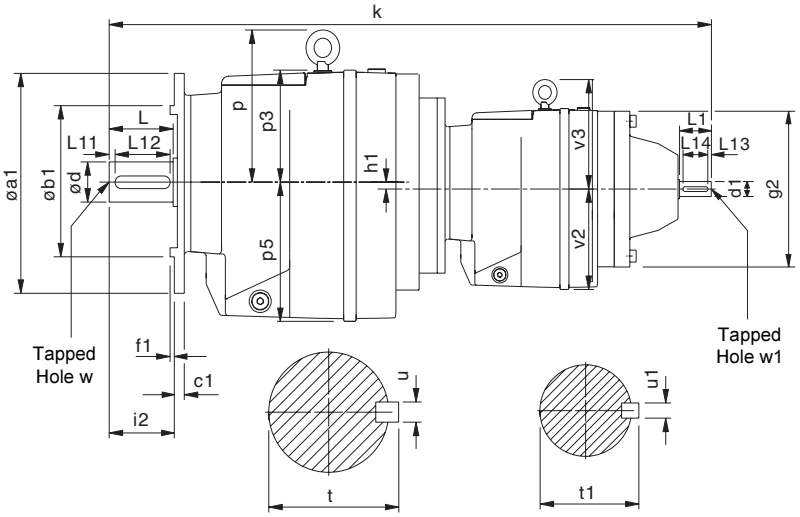

Sizes 3, 4, 5, 6, 7 and 8

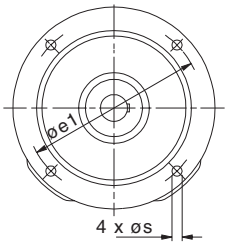

Sizes 9, 10, 13 and 14

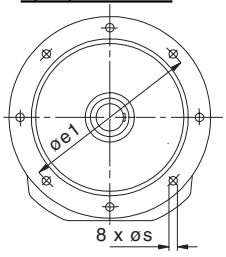

Note: Sizes 03 to 08 are also available as C-Flange (B14) Mounting, please see page 117 for details.

SIZE	øa1	øb1	c1	øe1	f1	øg2	h1	i2	k	p	p3	p5	s	v2	v3
M0342	120	80	10	100	3	140	-	50	503	-	90	91	6.6	76	-
	140	95	10	115	3			50					9		
	160	110	10	130	3.5			50					9		
	200	130	10	165	3.5			50					11		
M0442	140	95	11	115	3	140	-	60	571	-	93	115	9	91	-
	160	110	11	130	3.5			60					9		
	200	130	11	165	3.5			60					11		
	250	180	11	215	4			60					13.5		
M0542	140	95	11	115	3	140	-	70	581	-	93	115	9	91	-
	160	110	11	130	3.5			70					9		
	200	130	11	165	3.5			70					11		
	250	180	11	215	4			70					13.5		
M0642	200	130	11	165	4	140	14.5	70	602	116	84	130	11	91	-
	250	180	11	215	4			70					13.5		
	300	230	11	265	4			70					13.5		
M0742	200	130	11	165	3.5	140	-	80	639	155	110	140	11	91	-
	250	180	11	215	4			80					13.5		
	300	230	11	265	4			80					13.5		
M0842	300	230	17	265	4	180	-	100	751	180	130	182	13.5	115	-
	350	250	17	300	5			100					17.5		
M0941	450	350	18	400	5	180	-	140	832	198	-	230	18	115	-
M1041	450	350	22	400	5	212	-	140	956	245	-	260	18	140	155
M1341	550	450	25	500	5	212	-	170	1077	288	-	278	18	140	155
M1441	550	450	25	500	5	212	-	210	1192	320	-	318	18	140	155

SIZE	High Speed Shaft							Low Speed Shaft						
	d1	L1	L13	L14	t1	u1	w1	d	L	L11	L12	t	u	w
M0342	16 k6	40	4	32	18	5	M5 x 0.8 12 deep	25 k6	50	4	40	28	8	M10 x 1.5 22 deep
M0442	16 k6	40	4	32	18	5	M5 x 0.8 12 deep	30 k6	60	4	50	33	8	M10 x 1.5 22 deep
M0542	16 k6	40	4	32	18	5	M5 x 0.8 12 deep	35 k6	70	7	60	38	10	M12 x 1.75 28 deep
M0642	16 k6	40	4	32	18	5	M5 x 0.8 12 deep	35 k6	70	7	60	38	10	M12 x 1.75 28 deep
M0742	16 k6	40	4	32	18	5	M5 x 0.8 12 deep	40 k6	80	5	70	43	12	M16 x 2.0 36 deep
M0842	19 k6	40	4	32	21.5	6	M6 x 1.0 16 deep	50 k6	100	10	80	53.5	14	M16 x 2.0 36 deep
M0941	19 k6	40	4	32	21.5	6	M6 x 1.0 16 deep	60 m6	120	10	100	64	18	M20 x 2.5 42 deep
M1041	24 k6	50	5	40	27	8	M8 x 1.25 19 deep	70 m6	140	15	110	74.5	20	M20 x 2.5 42 deep
M1341	24 k6	50	5	40	27	8	M8 x 1.25 19 deep	90 m6	170	15	140	95	25	M24 x 3.0 50 deep
M1441	24 k6	50	5	40	27	8	M8 x 1.25 19 deep	100 m6	210	15	180	106	28	M24 x 3.0 50 deep

all parallel keys are to DIN 6885

DIMENSIONS - QUINTUPLE REDUCTION FLANGE MOUNT

0206

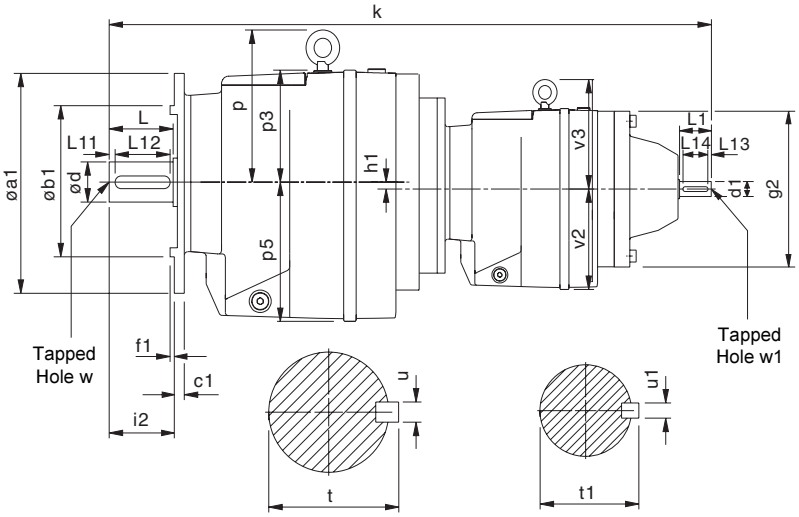

Sizes 3, 4, 5, 6, 7 and 8

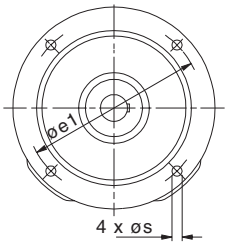

Sizes 9, 10, 13 and 14

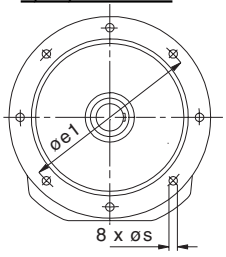

Note: Sizes 03 to 08 are also available as C-Flange (B14) Mounting, please see page 117 for details.

SIZE	øa1	øb1	c1	øe1	f1	øg2	h1	i2	k	p	p3	p5	s	v2	v3
M0352	120	80	10	100	3	140	-	50	518	-	90	91	6.6	76	-
	140	95	10	115	3			50					9		
	160	110	10	130	3.5			50					9		
	200	130	10	165	3.5			50					11		
M0452	140	95	11	115	3	140	-	60	584	-	93	115	9	91	-
	160	110	11	130	3.5			60					9		
	200	130	11	165	3.5			60					11		
	250	180	11	215	4			60					13.5		
M0552	140	95	11	115	3	140	-	70	594	-	93	115	9	91	-
	160	110	11	130	3.5			70					9		
	200	130	11	165	3.5			70					11		
	250	180	11	215	4			70					13.5		
M0652	200	130	11	165	4	140	14.5	70	615	116	84	130	11	91	-
	250	180	11	215	4			70					13.5		
	300	230	11	265	4			70					13.5		
M0752	200	130	11	165	3.5	140	-	80	651	155	110	140	11	91	-
	250	180	11	215	4			80					13.5		
	300	230	11	265	4			80					13.5		
M0852	300	230	17	265	4	180	-	100	759	180	130	182	13.5	115	-
	350	250	17	300	5			100					17.5		
M0951	450	350	18	400	5	180	-	140	840	198	-	230	18	115	-
M1051	450	350	22	400	5	212	-	140	968	245	-	260	18	140	155
M1351	550	450	25	500	5	212	-	170	1089	288	-	278	18	140	155
M1451	550	450	25	500	5	212	-	210	1204	320	-	318	18	140	155

SIZE	High Speed Shaft							Low Speed Shaft						
	d1	L1	L13	L14	t1	u1	w1	d	L	L11	L12	t	u	w
M0352	16 k6	40	4	32	18	5	M5 x 0.8 12 deep	25 k6	50	4	40	28	8	M10 x 1.5 22 deep
M0452	16 k6	40	4	32	18	5	M5 x 0.8 12 deep	30 k6	60	4	50	33	8	M10 x 1.5 22 deep
M0552	16 k6	40	4	32	18	5	M5 x 0.8 12 deep	35 k6	70	7	60	38	10	M12 x 1.75 28 deep
M0652	16 k6	40	4	32	18	5	M5 x 0.8 12 deep	35 k6	70	7	60	38	10	M12 x 1.75 28 deep
M0752	16 k6	40	4	32	18	5	M5 x 0.8 12 deep	40 k6	80	5	70	43	12	M16 x 2.0 36 deep
M0852	16 k6	40	4	32	18	5	M5 x 0.8 12 deep	50 k6	100	10	80	53.5	14	M16 x 2.0 36 deep
M0951	16 k6	40	4	32	18	5	M5 x 0.8 12 deep	60 m6	120	10	100	64	18	M20 x 2.5 42 deep
M1051	19 k6	40	4	32	21.5	6	M6 x 1.0 16 deep	70 m6	140	15	110	74.5	20	M20 x 2.5 42 deep
M1351	19 k6	40	4	32	21.5	6	M6 x 1.0 16 deep	90 m6	170	15	140	95	25	M24 x 3.0 50 deep
M1451	19 k6	40	4	32	21.5	6	M6 x 1.0 16 deep	100 m6	210	15	180	106	28	M24 x 3.0 50 deep

all parallel keys are to DIN 6885

Column 9 Entry

E C-Flange (B14) Mounting (For sizes M01 to M08 only)

V Base and C-Flange (B14) Mounting (available as standard for single reduction units only, other units can be supplied as special units)

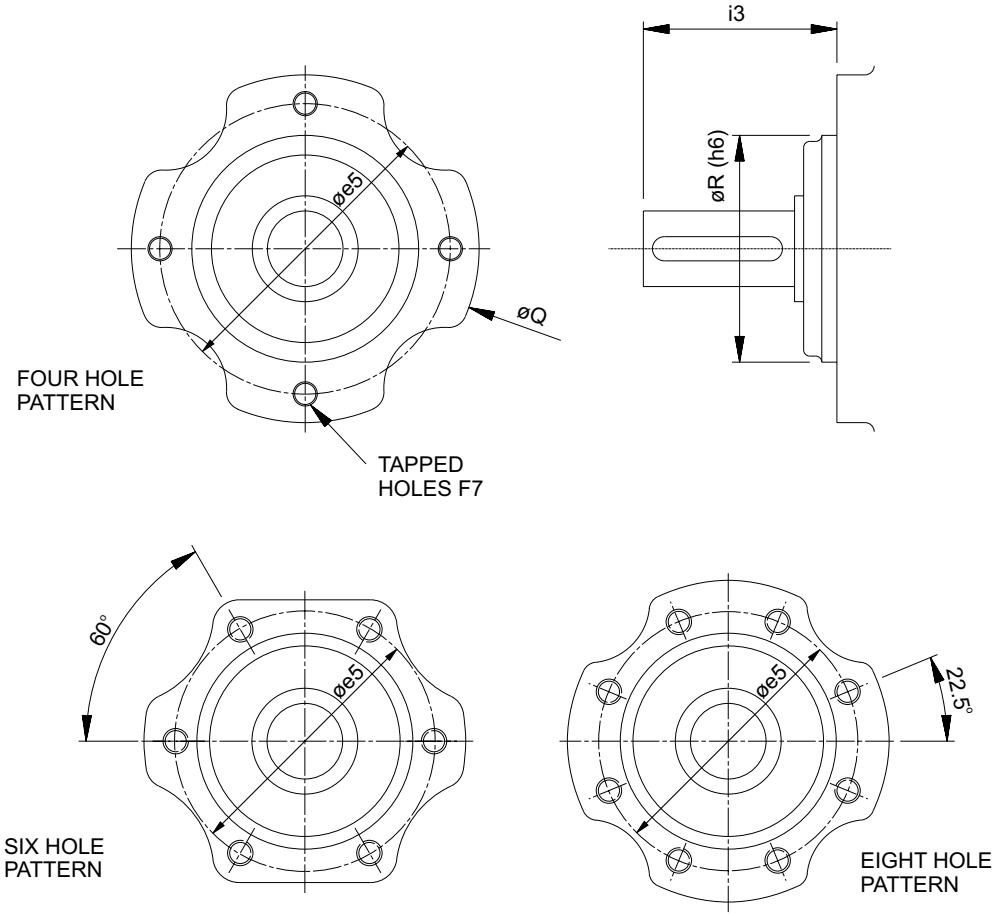

Single Stage Units

SIZE	øe5	F7	i3	øQ	øR
M0512	75 pcd	4 Holes M8 x 1.25 12 Deep	54	98	52
M0612	96 pcd	4 Holes M8 x 1.25 15 Deep	62	115	75
M0712	105 pcd	4 Holes M12 x 1.75 21 Deep	74	130	85
M0812	124 pcd	6 Holes M12 x 1.75 21 Deep	94	152	102

2, 3, 4 & 5 Stage Units

SIZE	øe5	F7	i3	øQ	øR
M01	75 pcd	4 Holes M8 x 1.25 12 Deep	54	98	52
M02 / M03	96 pcd	4 Holes M8 x 1.25 15 Deep	62 / 62	115	75
M04 / M05	105 pcd	4 Holes M12 x 1.75 21 Deep	74 / 84	130	85
M06 / M07	124 pcd	6 Holes M12 x 1.75 21 Deep	84 / 94	152	102
M08	170 pcd	8 Holes M12 x 1.75 21 Deep	120	195	145

THERMAL POWER RATING

0108

Thermal Ratings kW

Thermal ratings are a measure of the units ability to dissipate heat, if they are exceeded the lubricant may break down resulting in premature gear failure.

Thermal rating are based on an ambient temperature of 20°C, where units are to operate in other ambient temperatures thermal ratings must be adjusted by the following factors

Unit Size	Ambient Temperature °C							
	-20	-10	0	10	20	30	40	50
All Units	1.57	1.43	1.29	1.14	1.00	0.86	0.71	0.5

Thermal Power (kW) - Single Stage Units

Overall Ratios	Type of Cooling	Input Rev/min	Unit Size			
			M05	M06	M07	M08
All	Units with no additional cooling	2900	3.2	7.5	10.8	15.4
		1450	4.2	10	14.4	21
		960	4.0	9.6	13.8	20
		725	3.9	9.3	13.3	19.0
	Units with Fan cooling	2900	-	-	N/A	N/A
		1450	-	-	29	41
		960	-	-	24	34
		725	-	-	20	28

Thermal Power (kW) - Two Stage Units

Overall Ratios	Type of Cooling	Input Rev/min	Unit Size											
			M01	M02	M03	M04	M05	M06	M07	M08	M09	M10	M13	M14
1.4 to 5.6	Units with no additional cooling	2900	Consult Textron Power Transmission											
		1450	4.1	6.0	6.0	9.9	9.9	11.5	14.5	22	31	42	54	73
		960	4.0	5.7	5.7	9.5	9.5	11.0	13.8	21	30	40	51	70
		725	3.9	5.6	5.6	9.2	9.2	10.6	13.4	20	29	39	50	68
6.3 & over	Units with no additional cooling	2900	3.0	4.4	4.4	7.2	7.2	8.3	10.5	16	23	31	39	53
		1450	4.1	5.8	5.8	9.8	9.8	11.3	14.2	22	31	42	53	72
		960	3.9	5.5	5.5	9.4	9.4	10.8	13.6	21	29	40	50	69
		725	3.8	5.4	5.4	9.1	9.1	10.5	13.1	20	28	38	49	67
1.4 to 5.6	Units with Fan cooling	2900	N/A	N/A	N/A	N/A	N/A	N/A	N/A	N/A	N/A	N/A	N/A	N/A
		1450	-	-	-	-	-	-	29	44	63	85	107	146
		960	-	-	-	-	-	-	25	39	55	74	94	128
		725	-	-	-	-	-	-	22	33	47	63	81	110
6.3 & over	Units with Fan cooling	2900	-	-	-	-	-	-	N/A	N/A	N/A	N/A	N/A	N/A
		1450	-	-	-	-	-	-	28	43	62	83	105	144
		960	-	-	-	-	-	-	25	38	54	73	92	126
		725	-	-	-	-	-	-	21	33	46	62	79	108

Note: When checking thermal capacities use actual load required to be transmitted, not rating of prime mover.

0111

Column 10 Entry

For reducer fan kit modules enter [S] in column 10

or if used in conjunction with a reducer backstop module kit [Y] CW rotation

[Z] CCW rotation

Dimensions of Fan Cooled Units

Single Reduction Units

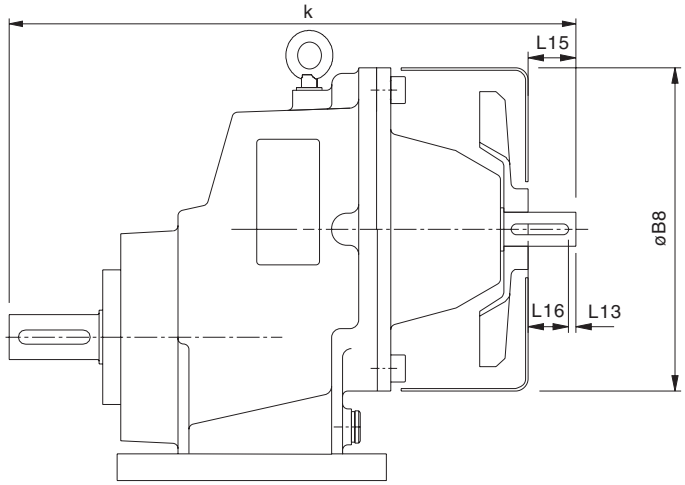

Shaft end detail as standard unit

Unit Size	øB8	k	L13	L15	L16
M0712	225	362	5	35	30
M0812	265	449	5	45	40

Double Reduction Units

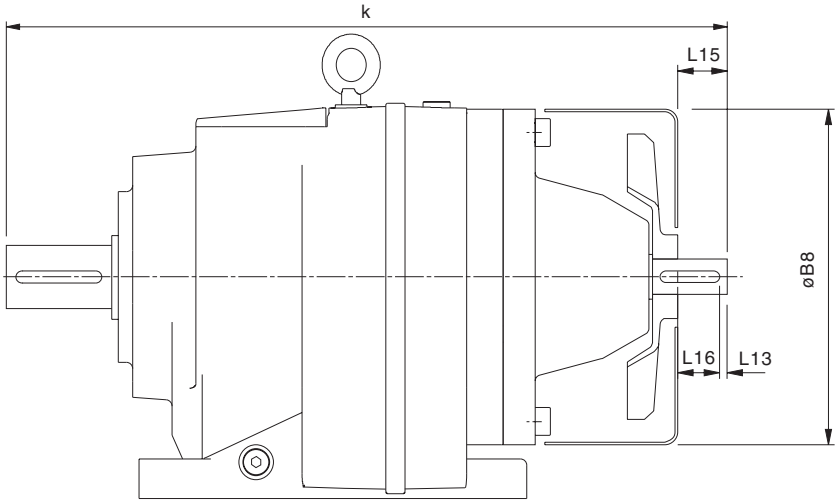

Shaft end detail as standard unit

Unit Size	øB8	k	L13	L15	L16
M0722	225	440	5	35	30
M0822	265	555	5	45	40
M0921	320	660	5	65	60
M1021	380	782	10	95	85
M1321	420	907	10	85	75
M1421	480	1022	10	85	75

REDUCER BACKSTOP MODULE

0210

The reducer units listed below can be fitted with an internal backstop, this has no effect of the external unit size. The backstop device incorporates high quality centrifugal lift off sprags which are wear free above the lift off speed (n min). To ensure correct operation input speed must exceed lift off speed.

Suitable for ambient temperature -40°C to + 50°C

Column 10 Entry

For reducer backstop modules enter W for CCW rotation (or Z if used in conjunction with a fan kit)
X for CW rotation (or Y if used in conjunction with a fan kit)

Unit Size	Lift off Speed ('n' min) (at inputshaft) (rev/min)	Rated Locking Torque ('T max') (at inputshaft) (Nm)
M0422	800	100
M0522	800	100
M0612	800	100
M0622	800	100
M0712	670	170
M0722	670	170
M0732	800	100
M0812	800	300
M0822	670	300
M0832	670	170
M0921	620	940
M0931	670	300
M1021	550	1260
M1031	670	300
M1321	550	2400
M1331	550	2400
M1421	550	2400
M1431	550	2400

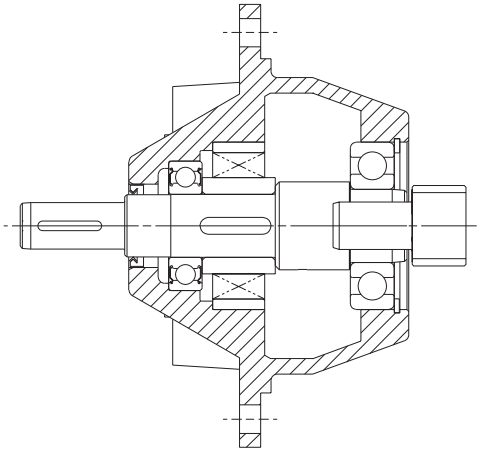

Rotation of outputshaft must be specified when ordering as viewed from the outputshaft end (as shown in the diagram)

CW	-	Free Rotation	-	Clockwise
		Locked	-	Anticlockwise
AC	-	Free Rotation	-	Anticlockwise
		Locked	-	Clockwise

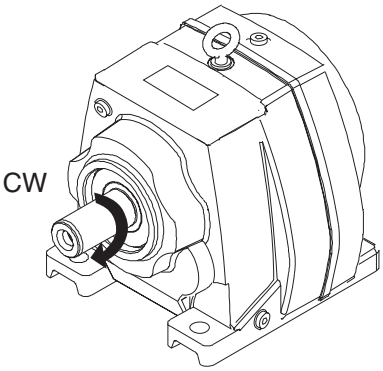

SHIPPING SPECIFICATION VOLUME

0103

UNIT SIZE & No OF REDUCTIONS			M0122	M0132	M0222	M0232	M0322	M0332	M0342	M0352	M0422	M0432	M0442	M0452	M0512	M0522	M0532	M0542	M0552	M0612	M0622	M0632	M0642	M0652	M0712	M0722
REDUCER VERSION			0.008	0.008	0.010	0.010	0.010	0.010	0.019	0.017	0.016	0.017	0.027	0.028	0.012	0.017	0.017	0.027	0.028	0.017	0.022	0.022	0.035	0.035	0.028	0.034
MOTORISED	63	Without Motor	0.007	0.007	0.009	0.009	0.009	0.009	0.014	0.014		0.015	0.024	0.023	0.010		0.016	0.024	0.023			0.020	0.031	0.030		
		With Motor	0.014	0.015	0.016	0.017	0.016	0.017	0.022	0.022		0.025	0.034	0.033	0.030		0.025	0.034	0.033			0.032	0.043	0.042		
	71	Without Motor	0.007	0.007	0.009	0.009	0.009	0.009	0.015	0.015		0.015	0.024	0.025	0.021		0.016	0.024	0.025			0.021	0.031	0.031		
		With Motor	0.015	0.016	0.017	0.018	0.017	0.018	0.023	0.024		0.025	0.034	0.034	0.031		0.026	0.034	0.034			0.033	0.043	0.043		
	80A	Without Motor	0.008	0.008	0.010	0.010	0.010	0.010	0.015	0.015	0.015	0.016	0.025	0.026	0.023	0.016	0.017	0.025	0.026	0.031	0.020	0.022	0.032	0.033	0.044	0.032
		With Motor	0.019	0.019	0.021	0.021	0.021	0.021	0.028	0.028	0.028	0.029	0.039	0.039	0.033	0.029	0.030	0.039	0.039	0.034	0.036	0.037	0.048	0.048	0.062	0.051
	80B	Without Motor	0.008	0.008	0.010	0.010	0.010	0.010	0.015	0.014	0.015	0.016	0.025	0.024	0.025	0.016	0.017	0.025	0.024	0.033	0.020	0.022	0.032	0.030	0.045	0.032
		With Motor	0.019	0.019	0.021	0.022	0.021	0.022	0.028	0.027	0.028	0.030	0.039	0.038	0.034	0.029	0.030	0.039	0.038	0.037	0.036	0.037	0.049	0.046	0.064	0.051
	90S	Without Motor	0.008	0.008	0.010	0.010	0.010	0.010	0.016	0.017	0.016	0.017	0.026	0.027	0.027	0.017	0.018	0.026	0.027	0.036	0.022	0.023	0.033	0.035	0.047	0.034
		With Motor	0.021	0.021	0.023	0.023	0.023	0.023	0.030	0.031	0.031	0.032	0.042	0.044	0.036	0.032	0.033	0.042	0.044	0.041	0.040	0.041	0.052	0.054	0.067	0.054
	90L	Without Motor	0.008	0.008	0.010	0.010	0.010	0.010	0.016	0.014	0.016	0.017	0.026	0.024	0.028	0.017	0.018	0.026	0.024	0.040	0.022	0.023	0.033	0.031	0.048	0.034
		With Motor	0.021	0.022	0.024	0.024	0.024	0.024	0.031	0.029	0.032	0.033	0.043	0.041	0.038	0.032	0.033	0.043	0.041	0.045	0.040	0.042	0.053	0.050	0.070	0.055
	90LA	Without Motor	0.008	0.008	0.010	0.010	0.010	0.010	0.016	0.014	0.016	0.017	0.026	0.024	0.029	0.017	0.018	0.026	0.024	0.042	0.022	0.023	0.033	0.031	0.049	0.034
		With Motor	0.022	0.022	0.024	0.024	0.024	0.024	0.031	0.030	0.032	0.033	0.044	0.041	0.038	0.033	0.034	0.044	0.041	0.049	0.041	0.042	0.054	0.051	0.071	0.056
	100L	Without Motor									0.018					0.018				0.035	0.023				0.054	0.035
		With Motor									0.038					0.039				0.060	0.046				0.081	0.062
	112M	Without Motor									0.018					0.018				0.036	0.023				0.055	0.035
		With Motor									0.040					0.041				0.064	0.049				0.087	0.066
	112MA	Without Motor									0.018					0.018				0.037	0.023				0.056	0.035
		With Motor									0.042					0.042				0.067	0.051				0.090	0.067
	132SA	Without Motor																		0.040					0.060	0.035
		With Motor																		0.078					0.104	0.076
	132SM	Without Motor																		0.041					0.062	0.035
		With Motor																		0.081					0.108	0.078
	132MA	Without Motor																		0.042					0.064	0.035
		With Motor																		0.085					0.112	0.080
	132MB	Without Motor																		0.044					0.066	0.035
		With Motor																		0.090					0.119	0.083
	160M	Without Motor																							0.065	
		With Motor																							0.121	
	160L	Without Motor																							0.069	
		With Motor																							0.129	
	180M	Without Motor																								
		With Motor																								
	180L	Without Motor																								
		With Motor																								
	200L	Without Motor																								
		With Motor																								
	225S	Without Motor																								
		With Motor																								
	225M	Without Motor																								
		With Motor																								
	250M	Without Motor																								
		With Motor																								
	280S	Without Motor																								
		With Motor																								
	280M	Without Motor																								
		With Motor																								

ALL VOLUMES IN m^3

SHIPPING SPECIFICATION VOLUME

0103

UNIT SIZE & No OF REDUCTIONS			M0732	M0742	M0752	M0812	M0822	M0832	M0842	M0852	M0921	M0931	M0941	M0951	M1021	M1031	M1041	M1051	M1321	M1331	M1341	M1351	M1421	M1431	M1441	M1451
REDUCER VERSION			0.036	0.052	0.054	0.055	0.068	0.071	0.102	0.102	0.108	0.108	0.137	0.137	0.178	0.178	0.217	0.217	0.230	0.245	0.295	0.295	0.328	0.352	0.411	0.411
MOTORISED	63	Without Motor		0.047	0.045					0.084				0.126												
		With Motor		0.064	0.062					0.111				0.162												
	71	Without Motor		0.047	0.047					0.087				0.131												
		With Motor		0.064	0.065					0.114				0.167												
	80A	Without Motor	0.033	0.049	0.049	0.073	0.061	0.062	0.088	0.090	0.095	0.098	0.132	0.133		0.158	0.211	0.212			0.229	0.243			0.350	0.352
		With Motor	0.052	0.068	0.068	0.102	0.090	0.091	0.117	0.119	0.134	0.137	0.171	0.172		0.213	0.265	0.267			0.289	0.304			0.427	0.429
	80B	Without Motor	0.033	0.049	0.046	0.074	0.061	0.062	0.088	0.085	0.095	0.098	0.132	0.126		0.158	0.211	0.203			0.229	0.233			0.350	0.339
		With Motor	0.053	0.068	0.065	0.104	0.091	0.092	0.118	0.115	0.135	0.139	0.173	0.166		0.215	0.267	0.259			0.291	0.295			0.429	0.418
	90S	Without Motor	0.035	0.050	0.052	0.078	0.062	0.065	0.091	0.095	0.096	0.100	0.135	0.139		0.160	0.215	0.221			0.231	0.253			0.356	0.364
		With Motor	0.055	0.071	0.073	0.110	0.093	0.096	0.122	0.126	0.139	0.142	0.178	0.181		0.220	0.274	0.280			0.297	0.318			0.440	0.448
	90L	Without Motor	0.035	0.050	0.047	0.080	0.062	0.065	0.091	0.086	0.096	0.100	0.135	0.128		0.160	0.215	0.205			0.231	0.235			0.356	0.342
		With Motor	0.056	0.072	0.069	0.113	0.095	0.098	0.124	0.120	0.141	0.145	0.180	0.173		0.223	0.278	0.268			0.301	0.305			0.444	0.430
	90LA	Without Motor	0.035	0.050	0.047	0.081	0.062	0.065	0.091	0.086	0.096	0.100	0.135	0.128		0.160	0.215	0.205			0.231	0.235			0.356	0.342
		With Motor	0.057	0.073	0.069	0.115	0.096	0.099	0.125	0.121	0.143	0.146	0.182	0.174		0.225	0.280	0.270			0.303	0.307			0.447	0.433
	100L	Without Motor	0.037			0.086	0.063	0.067	0.098		0.098	0.091	0.146		0.151	0.164	0.226	0.233			0.241	0.266	0.289		0.372	0.381
		With Motor	0.064			0.124	0.101	0.105	0.136		0.148	0.142	0.196		0.225	0.234	0.297	0.304			0.320	0.345	0.389		0.471	0.481
	112M	Without Motor	0.037			0.088	0.063	0.067			0.098	0.091			0.151	0.164	0.220		0.199	0.183	0.234		0.291	0.312	0.362	0.386
		With Motor	0.068			0.128	0.102	0.106			0.151	0.145			0.225	0.238	0.293		0.281	0.265	0.316		0.389	0.417	0.467	0.485
	112MA	Without Motor	0.037			0.091	0.063	0.067			0.098	0.091			0.151	0.164	0.220		0.199	0.183	0.234		0.291	0.312	0.362	0.398
		With Motor				0.132	0.105	0.109			0.154	0.148			0.229	0.242	0.298		0.286	0.270	0.321		0.395	0.423	0.473	0.498
	132SA	Without Motor				0.097	0.063				0.098				0.152	0.165	0.221		0.200	0.183	0.234		0.292	0.313	0.364	
		With Motor				0.146	0.112				0.162				0.212	0.253	0.310		0.299	0.283	0.334		0.410	0.439	0.490	
	132SM	Without Motor				0.099	0.063				0.098				0.152	0.165	0.221		0.200	0.183	0.234		0.292	0.313	0.364	
		With Motor				0.151	0.114				0.166				0.216	0.258	0.314		0.304	0.288	0.339		0.410	0.439	0.490	
	132MA	Without Motor				0.102	0.063				0.098				0.152	0.165	0.221		0.191	0.183	0.234		0.292	0.313	0.364	
		With Motor				0.157	0.117				0.170				0.221	0.264	0.320		0.302	0.294	0.345		0.416	0.445	0.496	
	132MB	Without Motor				0.107	0.063				0.098				0.152	0.165	0.221		0.200	0.183	0.234		0.292	0.313	0.364	
		With Motor				0.166	0.122				0.175				0.228	0.272	0.328		0.317	0.312	0.120		0.434	0.465	0.641	
	160M	Without Motor				0.105	0.063				0.104				0.160	0.172			0.198	0.192			0.288	0.311		
		With Motor				0.168	0.124				0.178				0.263	0.276			0.313	0.308			0.434	0.457		
	160L	Without Motor				0.110	0.063				0.104				0.160	0.172			0.198	0.192			0.288	0.311		
		With Motor				0.180	0.130				0.186				0.273	0.286			0.325	0.319			0.449	0.472		
	180M	Without Motor									0.092				0.143	0.156			0.180	0.174			0.265	0.288		
		With Motor									0.241				0.319	0.334			0.379	0.373			0.489	0.515		
	180L	Without Motor									0.092				0.143	0.156			0.180	0.174			0.272	0.295		
		With Motor									0.249				0.329	0.345			0.391	0.384			0.510	0.536		
	200L	Without Motor									0.092				0.143				0.180	0.180			0.265	0.288		
		With Motor									0.297				0.389				0.460	0.460			0.586	0.614		
	225S	Without Motor									0.092				0.143				0.180	0.180			0.265	0.288		
		With Motor									0.332				0.429				0.507	0.507			0.643	0.674		
	225M	Without Motor									0.093				0.144				0.181	0.181			0.266	0.289		
		With Motor									0.339				0.437				0.516	0.516			0.654	0.684		
	250M	Without Motor																	0.180				0.265			
		With Motor																	0.596				0.749			
	280S	Without Motor																	0.180				0.265			
		With Motor																	0.649				0.811			
	280M	Without Motor																	0.180				0.265			
		With Motor																	0.670				0.836			

ALL VOLUMES IN m^3

0106

BASE MOUNT UNITS

UNIT SIZE & No OF REDUCTIONS			M0122	M0132	M0222	M0232	M0322	M0332	M0342	M0352	M0422	M0432	M0442	M0452	M0512	M0522	M0532	M0542	M0552	M0612	M0622	M0632	M0642	M0652	M0712	M0722
REDUCER VERSION			8.2	8.8	12	13	12	13	21.1	21.7	22	22	33	34	7.3	22	22	35	36	13.2	27	27	40	41	23.9	38
MOTORISED	63	Without Motor	8.9	11	12	14	12	14	22	23		24	36	37	9		24	36	37			29	41	43		
		With Motor	13	15	17	18	17	18	26	28		28	40	42	13		28	40	42			33	45	47		
		With Motor & Brake	14	16	18	19	18	19	27	29		29	41	43	14		29	41	43			34	46	48		
	71	Without Motor	8.5	10	12	14	12	14	21	23		23	35	37	10		23	35	37			29	41	42		
		With Motor	15	17	19	20	19	20	28	29		30	42	43	16		30	42	44			35	47	49		
		With Motor & Brake	16	18	20	21	20	21	29	30		31	43	44	17		31	43	45			36	48	50		
	80A	Without Motor	9.0	12	13	14	13	14	22	23	21	24	36	37	10	22	24	36	38	13	27	29	41	43	20	34
		With Motor	19	21	22	24	22	24	31	33	31	33	45	47	19	31	33	45	47	22	36	39	51	52	30	44
		With Motor & Brake	21	23	24	26	24	26	33	35	33	35	47	49	21	33	35	47	49	24	38	41	53	54	32	46
	80B	Without Motor	9.0	12	13	14	13	14	22	23	21	24	36	37	10	22	24	36	38	13	27	29	41	43	20	34
		With Motor	20	23	24	25	24	25	33	34	32	35	47	48	21	33	35	47	49	24	38	40	52	54	31	45
		With Motor & Brake	22	25	26	27	26	27	35	36	34	37	49	50	23	35	37	49	51	26	40	42	54	56	33	47
	90S	Without Motor	10	12	13	16	13	15	23	24	22	24	37	38	11	23	25	37	38	14	28	30	42	44	21	35
		With Motor	23	25	27	30	27	28	36	38	36	38	50	52	24	36	38	50	52	27	41	43	55	57	34	48
		With Motor & Brake	26	28	29	32	29	31	39	40	38	40	53	54	27	39	41	53	54	30	44	46	58	60	37	51
	90L	Without Motor	10	12	13	16	13	15	23	24	22	24	37	38	11	23	25	37	38	14	28	30	42	44	21	35
		With Motor	24	26	28	31	28	29	37	39	37	39	51	53	25	37	39	51	53	28	42	44	56	58	35	49
		With Motor & Brake	27	29	30	33	30	32	40	41	39	41	54	55	28	40	42	54	55	31	45	47	59	61	38	52
	90LA	Without Motor	10	12	13	16	13	15	23	24	22	24	37	38	11	23	25	37	38	14	28	30	42	44	21	35
		With Motor	30	32	33	36	33	35	43	44	42	44	57	58	31	43	45	57	58	34	48	50	62	64	41	55
		With Motor & Brake	32	34	35	38	35	37	45	46	44	46	59	60	33	45	47	59	60	36	50	52	64	66	43	57
	100L	Without Motor									21				10	22				13	27				24	38
		With Motor									45				34	46				37	51				48	62
		With Motor & Brake									50				39	51				42	56				53	67
	112M	Without Motor									25				13	25				16	31				24	38
		With Motor									56				44	56				47	62				55	69
		With Motor & Brake									61				49	61				52	67				60	74
	112MA	Without Motor									25				13	25				16	31				24	38
		With Motor									45				45	45				61	76				69	83
		With Motor & Brake									50				50	50				66	81				74	88
	132SA	Without Motor																		17					26	40
		With Motor																		65					74	88
		With Motor & Brake																		74					83	97
	132M	Without Motor																		17					26	40
		With Motor																		69					78	92
		With Motor & Brake																		78					87	101
	132MA	Without Motor																		17					26	40
		With Motor																		95					104	118
		With Motor & Brake																		104					113	127
	132MB	Without Motor																		17					26	40
		With Motor																		105					114	128
		With Motor & Brake																		114					123	137
	160M	Without Motor																							27	
		With Motor																							108	
	160L	Without Motor																							27	
		With Motor																							122	

UNIT SIZE & No OF REDUCTIONS			M0732	M0742	M0752	M0812	M0822	M0832	M0842	M0852	M0921	M0931	M0941	M0951	M1021	M1031	M1041	M1051	M1321	M1331	M1341	M1351	M1421	M1431	M1441	M1451
REDUCER VERSION			39	48	49	35.1	67	74	96	96	114	123	140	140	170	179	204	206	248	270	279	280	360	405	395	396
MOTORISED	63	Without Motor		48	51					95				133												
		With Motor		53	55					99				137												
		With Motor & Brake		54	56					100				138												
	71	Without Motor		48	51					95				133												
		With Motor		54	58					101				139												
		With Motor & Brake		55	59					102				140												

ALL WEIGHTS IN KG ALL WEIGHTS EXCLUDE LUBRICANT

SHIPPING SPECIFICATION

0210

BASE MOUNT UNITS

UNIT SIZE & No OF REDUCTIONS			M0732	M0742	M0752	M0812	M0822	M0832	M0842	M0852	M0921	M0931	M0941	M0951	M1021	M1031	M1041	M1051	M1321	M1331	M1341	M1351	M1421	M1431	M1441	M1451
REDUCER VERSION			39	48	49	35.1	67	74	96	96	114	123	140	140	170	179	204	206	248	270	279	280	360	405	395	396
MOTORISED	80A	Without Motor	39	48	52	41	73	71	96	99	117	127	145	148		182	194	199			336	342			446	452
		With Motor	49	57	61	51	82	81	105	108	127	137	154	157		192	203	209			346	351			456	461
		With Motor & Brake	51	59	63	53	84	83	107	110	129	139	156	159		194	205	211			348	353			458	463
	80B	Without Motor	39	48	52	41	73	71	96	99	117	127	145	148		182	194	199			336	342			446	452
		With Motor	50	59	63	52	84	82	107	110	128	138	156	159		193	205	210			347	353			457	463
		With Motor & Brake	52	61	65	54	86	84	109	112	130	140	158	161		195	207	212			349	355			459	465
	90S	Without Motor	40	48	52	41	73	72	97	100	117	127	145	149		182	194	200			337	342			445	450
		With Motor	53	62	66	55	86	85	110	113	131	141	159	162		196	208	213			350	356			458	464
		With Motor & Brake	56	64	68	57	89	88	113	116	133	143	161	165		198	210	216			353	358			461	466
	90L	Without Motor	40	48	52	41	73	72	97	100	117	127	145	149		182	194	200			337	342			445	450
		With Motor	54	63	67	56	87	86	111	114	132	142	160	163		197	209	214			351	357			459	465
		With Motor & Brake	57	65	69	58	90	89	114	117	134	144	162	166		199	211	217			354	359			462	467
	90LA	Without Motor	40	48	52	41	73	72	97	100	117	127	145	149		182	194	200			337	342			445	450
		With Motor	60	68	72	61	93	92	117	120	137	147	165	169		202	214	220			357	362			465	470
		With Motor & Brake	62	70	74	63	95	94	119	122	139	149	167	171		204	216	222			359	364			467	472
	100L	Without Motor	39			41	73	75	97		117	127	145		163	182	197	203	239	271	340	345	344	394	450	455
		With Motor	63			65	97	99	121		141	151	169		187	206	221	227	263	295	364	369	368	418	474	479
		With Motor & Brake	68			70	102	104	126		146	156	174		192	211	226	232	268	300	369	374	373	423	479	484
	112M	Without Motor	43			41	73	75			117	127			163	182	197	203	239	271	340	345	344	394	450	455
		With Motor	74			72	104	106			148	158			194	213	228	234	270	302	371	376	375	425	481	486
		With Motor & Brake	79			77	109	111			153	163			199	218	233	239	275	307	376	381	380	430	486	491
	112MA	Without Motor	43			41	73	75			117	127			163	182	197		239	271	340	345	344	394	450	455
		With Motor	88			86	118	120			162	172			208	227	242		284	316	385	390	389	439	495	500
		With Motor & Brake	93			91	123	125			167	177			213	232	247		289	321	390	395	394	444	500	505
	132SA	Without Motor				40	72				117				163	182	199		239	271	342	347	344	394	452	
		With Motor				88	120				165				211	230	247		287	319	390	395	392	442	500	
		With Motor & Brake				97	129				174				220	239	256		296	328	399	404	401	451	509	
	132M	Without Motor				40	72				117				163	182	199		239	271	342	347	344	394	452	
		With Motor				92	124				169				215	234	251		291	323	394	399	396	446	504	
		With Motor & Brake				101	133				178				224	243	260		300	332	403	408	405	455	513	
	132MA	Without Motor				40	72				117				163	182	199		239	271	342	347	344	394	452	
		With Motor				118	150				195				241	260	277		317	349	420	425	422	472	530	
		With Motor & Brake				127	159				204				250	269	286		326	358	429	434	431	481	539	
	132MB	Without Motor				40	72				117				163	182	199		239	271	342	347	344	394	452	
		With Motor				128	160				205				251	270	287		327	359	430	435	432	482	540	
		With Motor & Brake				137	169				214				260	279	296		336	368	439	444	441	491	549	
	160M	Without Motor				41	72				124				172	189			247	279			357	402		
		With Motor				122	153				205				253	270			328	360			438	483		
	160L	Without Motor				41	72				124				172	189			247	279			357	402		
		With Motor				136	167				219				267	284			342	374			452	497		
	180M	Without Motor									124				172	189			247	279			357	402		
		With Motor									291				339	356			414	446			524	569		
	180L	Without Motor									124				172	189			247	279			357	402		
		With Motor									305				353	370			428	460			538	583		
	200L	Without Motor									124				172				247	279			357	402		
		With Motor									356				404				479	511			589	634		
	225S	Without Motor									138				186				261	293			371	416		
		With Motor									425				473				548	580			658	703		
	225M	Without Motor									138				186				261	293			371	416		
		With Motor									460				508				583	615			693	738		
	250M	Without Motor																	310				420			
		With Motor																	695				805			
	280S	Without Motor																	310				420			
		With Motor																	820				930			
	280M	Without Motor																	310				420			
		With Motor																	910				1020			

ALL WEIGHTS IN KG ALL WEIGHTS EXCLUDE LUBRICANT

0106

FLANGE MOUNT UNITS *

UNIT SIZE & No OF REDUCTIONS			M0122	M0132	M0222	M0232	M0322	M0332	M0342	M0352	M0422	M0432	M0442	M0452	M0512	M0522	M0532	M0542	M0552	M0612	M0622	M0632	M0642	M0652	M0712	M0722
REDUCER VERSION			8.5	9.1	13	14	13	14	22	22.6	23	23	35	36	8.2	24	23	37	38	14.7	29	29	42	43	25.9	40
MOTORISED	63	Without Motor	9.4	10	14	15	14	15	23	23		26	38	39	12		22	34	36			25	39	41		
		With Motor	14	15	18	20	18	20	28	27		30	42	44	17		27	39	40			29	43	45		
		With Motor & Brake	15	16	19	21	19	21	29	28		31	43	45	18		28	40	41			30	44	46		
	71	Without Motor	9.0	10	13	15	13	15	23	22		25	37	39	13		22	34	36			27	39	40		
		With Motor	16	16	20	21	20	21	29	29		32	44	45	19		28	40	42			33	45	47		
		With Motor & Brake	17	17	21	22	21	22	30	30		33	45	46	20		29	41	43			34	46	48		
	80A	Without Motor	10	11	14	15	12	15	23	23	24	26	38	39	13	20	22	34	36	12	25	27	39	41	19	32
		With Motor	19	21	23	25	21	25	33	32	33	35	47	49	22	30	32	44	46	21	34	37	49	50	28	42
		With Motor & Brake	21	23	25	27	23	27	35	34	35	37	49	51	24	32	34	46	48	23	36	39	51	52	30	44
	80B	Without Motor	10	11	14	15	14	15	23	23	24	26	38	39	13	20	22	34	36	12	25	27	39	41	19	32
		With Motor	21	22	25	26	25	26	34	34	35	37	49	50	24	31	33	45	47	23	36	38	50	52	30	43
		With Motor & Brake	23	24	27	28	27	28	36	36	37	39	51	52	26	33	35	47	49	25	38	40	52	54	32	45
	90S	Without Motor	10	11	15	18	15	16	22	25	24	27	40	40	14	21	23	35	37	13	26	28	40	42	19	33
		With Motor	24	25	28	31	28	30	35	39	38	40	53	54	27	35	37	49	50	26	39	41	54	55	33	46
		With Motor & Brake	26	27	31	34	31	32	38	41	40	43	56	56	30	37	39	51	53	29	42	44	56	58	35	49
	90L	Without Motor	10	11	15	18	15	16	22	25	24	27	40	40	14	21	23	35	37	13	26	28	40	42	19	33
		With Motor	25	26	29	32	29	31	36	40	39	41	54	55	28	36	38	50	51	27	40	42	55	56	34	47
		With Motor & Brake	27	28	32	35	32	33	39	42	41	44	57	57	31	38	40	52	54	30	43	45	57	59	36	50
	90LA	Without Motor	10	11	15	18	15	16	22	25	24	27	40	40	14	21	23	35	37	13	26	28	40	42	19	33
		With Motor	30	31	35	38	35	36	42	45	44	47	60	60	34	41	43	55	57	33	46	48	60	62	39	53
		With Motor & Brake	32	33	37	40	37	38	44	47	46	49	62	62	36	43	45	57	59	35	48	50	62	64	41	55
	100L	Without Motor									24				13	20				12	25				22	36
		With Motor									48				37	44				36	49				46	60
		With Motor & Brake									53				42	49				41	54				51	65
	112M	Without Motor									27				16	24				15	29				22	36
		With Motor									58				47	55				46	60				53	67
		With Motor & Brake									63				52	60				51	65				58	72
	112MA	Without Motor									27				16	24				15	29				22	36
		With Motor									45				45	45				60	74				67	81
		With Motor & Brake									50				50	50				65	79				72	86
	132SA	Without Motor																		16					24	38
		With Motor																		64					72	86
		With Motor & Brake																		73					81	95
	132M	Without Motor																		16					24	38
		With Motor																		68					76	90
		With Motor & Brake																		77					85	99
	132MA	Without Motor																		16					24	38
		With Motor																		94					102	116
		With Motor & Brake																		103					111	125
	132MB	Without Motor																		16					24	38
		With Motor																		104					112	126
		With Motor & Brake																		113					121	135
	160M	Without Motor																							25	
		With Motor																							106	
	160L	Without Motor																							25	
		With Motor																							120	

UNIT SIZE & No OF REDUCTIONS			M0732	M0742	M0752	M0812	M0822	M0832	M0842	M0852	M0921	M0931	M0941	M0951	M1021	M1031	M1041	M1051	M1321	M1331	M1341	M1351	M1421	M1431	M1441	M1451
REDUCER VERSION			41	50	51	39	71	78	101	100	117	126	143	143	166	175	200	202	245	267	276	277	340	385	375	376
MOTORISED	63	Without Motor		46	49					93				130												
		With Motor		51	53					97				134												
		With Motor & Brake		52	54					98				135												
	71	Without Motor		46	49					93				130												
		With Motor		52	56					99				136												
		With Motor & Brake		53	57					100				137												

ALL WEIGHTS IN KG

ALL WEIGHTS EXCLUDE LUBRICANT

* FLANGE MOUNTED UNITS - WEIGHTS ARE GIVEN FOR LARGEST FLANGE AVAILABLE
PLEASE CONTACT TEXTRON POWER TRANSMISSION FOR EXACT WEIGHT

SHIPPING SPECIFICATION

0210

FLANGE MOUNT UNITS *

UNIT SIZE & No OF REDUCTIONS			M0732	M0742	M0752	M0812	M0822	M0832	M0842	M0852	M0921	M0931	M0941	M0951	M1021	M1031	M1041	M1051	M1321	M1331	M1341	M1351	M1421	M1431	M1441	M1451
REDUCER VERSION			41	50	51	39.7	71	78	101	100	117	126	143	143	166	175	200	202	245	267	276	277	340	385	375	376
MOTORISED	80A	Without Motor	37	46	50	39	69	70	92	95	120	130	142	145		178	190	195			323	329			426	432
		With Motor	47	55	59	49	79	79	102	105	130	140	151	154		188	199	205			333	338			436	441
		With Motor & Brake	49	57	61	51	81	81	104	107	132	142	153	156		190	201	207			335	340			438	443
	80B	Without Motor	37	46	50	39	69	70	92	95	120	130	142	145		178	190	195			323	329			426	432
		With Motor	48	57	61	50	80	81	103	106	131	141	153	156		189	201	206			334	340			437	443
		With Motor & Brake	50	59	63	52	82	83	105	108	133	143	155	158		191	203	208			336	342			439	445
	90S	Without Motor	38	46	50	39	69	70	93	96	120	130	142	146		178	190	196			324	329			425	430
		With Motor	51	60	64	53	83	84	107	110	134	144	156	159		192	204	209			337	343			438	444
		With Motor & Brake	54	62	66	55	85	86	109	112	136	146	158	162		194	206	212			340	345			441	446
	90L	Without Motor	38	46	50	39	69	70	93	96	120	130	142	146		178	190	196			324	329			425	430
		With Motor	52	61	65	54	84	85	108	111	135	145	157	160		193	205	210			338	344			439	445
		With Motor & Brake	55	63	67	56	86	87	110	113	137	147	159	163		195	207	213			341	346			442	447
	90LA	Without Motor	38	46	50	39	69	70	93	96	120	130	142	146		178	190	196			324	329			425	430
		With Motor	58	66	70	59	89	90	113	116	140	150	162	166		198	210	216			344	349			445	450
		With Motor & Brake	60	68	72	61	91	92	115	118	142	152	164	168		200	212	218			346	351			447	452
	100L	Without Motor	37			39	69	73	95		120	130	142		159	178	193	199	236	268	327	332	324	374	430	435
		With Motor	61			63	93	97	119		144	154	166		183	202	217	223	260	292	351	356	348	398	454	459
		With Motor & Brake	66			68	98	102	124		149	159	171		188	207	222	228	265	297	356	361	353	403	459	464
	112M	Without Motor	41			39	69	73			120	130			159	178	193	199	236	268	327	332	324	374	430	435
		With Motor	72			70	100	104			151	161			190	209	224	230	267	299	358	363	355	405	461	466
		With Motor & Brake	77			75	105	109			156	166			195	214	229	235	272	304	363	368	360	410	466	471
	112MA	Without Motor	41			39	69	73			120	130			159	178	193		236	268	327	332	324	374	430	435
		With Motor	86			84	114	118			165	175			204	223	238		281	313	372	377	369	419	475	480
		With Motor & Brake	91			89	119	123			170	180			209	228	243		286	318	377	382	374	424	480	485
	132SA	Without Motor				38	68				120				159	178	195		236	268	329	334	324	374	432	
		With Motor				86	116				168				207	226	243		284	316	377	382	372	422	480	
		With Motor & Brake				95	125				177				216	235	252		293	325	386	391	381	431	489	
	132M	Without Motor				38	68				120				159	178	195		236	268	329	334	324	374	432	
		With Motor				90	120				172				211	230	247		288	320	381	386	376	426	484	
		With Motor & Brake				99	129				181				220	239	256		297	329	390	395	385	435	493	
	132MA	Without Motor				38	68				120				159	178	195		236	268	329	334	324	374	432	
		With Motor				116	146				198				237	256	273		314	346	407	412	402	452	510	
		With Motor & Brake				125	155				207				246	265	282		323	355	416	421	411	461	519	
	132MB	Without Motor				38	68				120				159	178	195		236	268	329	334	324	374	432	
		With Motor				126	156				208				247	266	283		324	356	417	422	412	462	520	
		With Motor & Brake				135	165				217				256	275	292		333	365	426	431	421	471	529	
	160M	Without Motor				39	69				127				168	185			244	276			337	382		
		With Motor				120	150				208				249	266			325	357			418	463		
	160L	Without Motor				39	69				127				168	185			244	276			337	382		
		With Motor				134	164				222				263	280			339	371			432	477		
	180M	Without Motor									127				168	185			244	276			337	382		
		With Motor									294				335	352			411	443			504	549		
	180L	Without Motor									127				168	185			244	276			337	382		
		With Motor									308				349	366			425	457			518	563		
	200L	Without Motor									127				168				244	276			337	382		
		With Motor									359				400				476	508			569	614		
	225S	Without Motor									141				182				258	290			351	396		
		With Motor									428				469				545	577			638	683		
	225M	Without Motor									141				182				258	290			351	396		
		With Motor									463				504				580	612			673	718		
	250M	Without Motor																	307				400			
		With Motor																	692				785			
	280S	Without Motor																	307				400			
		With Motor																	817				910			
	280M	Without Motor																	307				400			
		With Motor																	907				1000			

ALL WEIGHTS IN KG

ALL WEIGHTS EXCLUDE LUBRICANT

* FLANGE MOUNTED UNITS - WEIGHTS ARE GIVEN FOR LARGEST FLANGE AVAILABLE
PLEASE CONTACT TEXTRON POWER TRANSMISSION FOR EXACT WEIGHT

IMPORTANT

Product Safety Information

General - The following information is important in ensuring safety. It **must** be brought to the attention of personnel involved in the selection of Textron Power Transmission equipment, those responsible for the design of the machinery in which it is to be incorporated and those involved in its installation, use and maintenance.

Textron Power Transmission equipment will operate safely provided it is selected, installed, used and maintained properly. As with any power transmission equipment **proper precautions must** be taken as indicated in the following paragraphs, to ensure safety.

Potential Hazards - these are **not** necessarily listed in any order of severity as the degree of danger varies in individual circumstances. It is important therefore that the list is studied in its entirety:-

1) Fire/Explosion
   (a) Oil mists and vapour are generated within gear units. It is therefore dangerous to use naked lights in the proximity of gearbox openings, due to the risk of fire or explosion.
   (b) In the event of fire or serious overheating (over 300 °C), certain materials (rubber, plastics, etc.) may decompose and produce fumes. Care should be taken to avoid exposure to the fumes, and the remains of burned or overheated plastic/rubber materials should be handled with rubber gloves.

2) Guards - Rotating shafts and couplings must be guarded to eliminate the possibility of physical contact or entanglement of clothing. It should be of rigid construction and firmly secured.

3) Noise - High speed gearboxes and gearbox driven machinery may produce noise levels which are damaging to the hearing with prolonged exposure. Ear defenders should be provided for personnel in these circumstances. Reference should be made to the Department of Employment Code of Practice for reducing exposure of employed persons to noise.

4) Lifting - Where provided (on larger units) only the lifting points or eyebolts must be used for lifting operations (see maintenance manual or general arrangement drawing for lifting point positions). Failure to use the lifting points provided may result in personal injury and/or damage to the product or surrounding equipment. Keep clear of raised equipment.

5) Lubricants and Lubrication
   (a) Prolonged contact with lubricants can be detrimental to the skin. The manufactures instruction must be followed when handling lubricants.
   (b) The lubrication status of the equipment must be checked before commissioning. Read and carry out all instructions on the lubricant plate and in the installation and maintenance literature. Heed all warning tags. Failure to do so could result in mechanical damage and in extreme cases risk of injury to personnel.

6) Electrical Equipment - Observe hazard warnings on electrical equipment and isolate power before working on the gearbox or associated equipment, in order to prevent the machinery being started.

7) Installation, Maintenance and Storage
   (a) In the event that equipment is to be held in storage, for a period exceeding 6 months, prior to installation or commissioning, Textron Power Transmission must be consulted regarding special preservation requirements. Unless otherwise agreed, equipment must be stored in a building protected from extremes of temperature and humidity to prevent deterioration.

       The rotating components (gears and shafts) must be turned a few revolutions once a month (to prevent bearings brinelling).
   (b) External gearbox components may be supplied with preservative materials applied, in the form of a "waxed" tape overwrap or wax film preservative. Gloves should be worn when removing these materials. The former can be removed manually, the latter using white spirit as a solvent.

       Preservatives applied to the internal parts of the gear units do not require removal prior to operation.
   (c) Installation must be performed in accordance with the manufacturer's instructions and be undertaken by suitably qualified personnel.
   (d) Before working on a gearbox or associated equipment, ensure that the load has been removed from the system to eliminate the possibility of any movement of the machinery and isolate power supply. Where necessary, provide mechanical means to ensure the machinery cannot move or rotate. Ensure removal of such devices after work is complete.
   (e) Ensure the proper maintenance of gearboxes in operation. Use only the correct tools and Textron Power Transmission approved spare parts for repair and maintenance. Consult the Maintenance Manual before dismantling or performing maintenance work.

8) Hot Surfaces and Lubricants
   (a) During operation, gear units may become sufficiently hot to cause skin burns. Care must be taken to avoid accidental contact.
   (b) After extended running the lubricant in gear units and lubrication systems may reach temperatures sufficient to cause burns. Allow equipment to cool before servicing or performing adjustments.

9) Selection and Design
   (a) Where gear units provide a backstop facility, ensure that back-up systems are provided if failure of the backstop device would endanger personnel or result in damage.
   (b) The driving and driven equipment must be correctly selected to ensure that the complete machinery installation will perform satisfactorily, avoiding system critical speeds, system torsional vibration, etc.
   (c) The equipment must not be operated in an environment or at speeds, powers, torques or with external loads beyond those for which it was designed.
   (d) As improvements in design are being made continually the contents of this catalogue are not to be regarded as binding in detail, and drawings and capacities are subject to alterations without notice.

The above guidance is based on the current state of knowledge and our best assessment of the potential hazards in the operation of the gear units.

Any further information or clarification required may be obtained by contacting Textron Power Transmission.

Contact Textron Power Transmission

0105

AUSTRALIA

David Brown Gear Industries Ltd
13-19 Franklin Avenue
Bulli, NSW 2516
Australia
Tel: +61 2 4283 0300
Fax: +61 2 4283 0333

AUSTRIA

Benzler Antriebst Ges mbH
Urnenhainweg 7
AT-4050 Traun
Austria
Tel: +43 7 229 618 91
Fax: +43 7 229 618 84

BELGIUM

Benzlers Belgium
Contact the Northern Euopean Service Centre (Netherlands)
Tel: +32 25 82 59 22
Fax: +32 25 82 68 47

CANADA

David Brown Radicon Inc
975 Dillingham Road
Pickering, Ontario
L1W 3B2
Canada
Tel: +01 905 420 4141
Fax: +01 905 420 9513

DENMARK

Benzler Transmission A/S
Hammerholmen 39
DK-2650 Hvidovre
Denmark
Tel: +45 36 34 03 00
Fax: +45 36 77 02 42

FINLAND

Oy Benzler AB
PB 3
FI 02211 Espoo
Finland
Tel: +358 9 8870 630
Fax: +358 9 8870 631

FRANCE

Benzler France
Contact the Northern Euopean Service Centre (Netherlands)
Tel: +33 130 32 79 00
Fax: +33 130 32 80 40

David Brown Transmissions France SA
42 Avenue du Progrès, BP 149
69686 Chassieu Cedex
France
Tel: +33 4 72 47 61 50
Fax: +33 4 72 47 61 69

DSN
9 rue de la Verrerie, BP 135
ZI Le Fontanil Cedex
38521 El Fontanil
France
Tel: +33 4 76 75 66 83
Fax: +33 4 76 75 57 99

WECO
33 Rue Henri-Lebert, BP 48
68801 Thann Cedex
France
Tel: +33 3 89 37 01 13
Fax: +33 3 89 37 39 36

GERMANY

Benzler Germany
Contact the Northern Euopean Service Centre (Netherlands)
Tel: 0800 350 40 00
Fax: 0800 350 40 01

HUNGARY

Benzler Antriebst Ges mbH
Urnenhainweg 7
AT-4050 Traun
Austria
Tel: +43 7 229 618 91
Fax: +43 7 229 618 84

ITALY

Benzler Ferri SpA
Via F.lli Rosselli 16
IT 42019 Scandiano (RE)
Italy
Tel: +39 05 22 763314
Fax: +39 05 22 981758

MALAYSIA

Benzler (M) Sdn Bhd
No 24 Jalan TPJ 3
Taman Perindustrian
Jaya Subang
MY 47200 Selangor
Malaysia
Tel: +60 3 745 0668
Fax: +60 3 746 1436

NETHERLANDS

Northern European Service Centre & HQ
Benzlers Netherland
Postbox 3303
NL 5902 Venlo RH
Netherlands
Tel: +31 773 245 900
Fax: +31 773 245 901

NORWAY

Textron Power Transmission (Norge)
Incorporating Benzler A/S & David Brown Hydraulics Norway A/S
PO Box 73 Leirdal
Stromsveien 372
NO- 1008 Oslo
Norway
Tel: +47 22 90 94 30
Fax: +47 22 90 94 11

PHILIPPINES

David Brown John Welsh Custom Build (Pty) Ltd
Unit 1207 One Magnificent Mile
San Miguel Ave, Ortigas Centre
Pasiq City, Philippines
Tel: +63 6 32 910 0316
Fax: +63 6 32 910 0317

SINGAPORE

Benzler (FE) Pte Ltd
1 Clementi Loop
#03-08
Singapore 129808
Tel: +65 469 0777
Fax: +65 469 2083

SOUTH AFRICA

David Brown Gear Industries Ltd
PO Box 540, Benoni 1500
South Africa
Tel: +27 11 748 0000
Fax: +27 11 421 2963

David Brown Gear Industries Ltd
PO Box 36882
Chempet 7442
Cape Town
South Africa
Tel: +27 21 551 2163
Fax: +27 21 551 2164

David Brown Gear Industries Ltd
Natal Sales Office
39 Richmond Road
Pinetown 3600
Natal, South Africa
Tel: +27 31 700 3302
Fax: +27 31 700 1872

SWEDEN

AB Benzlers
PO Box 922
SE-251 09 Helsingborg
Sweden
Tel: +46 42 18 6800
Fax: +46 42 21 8803

THAILAND

David Brown Powauto (Thailand) Ltd
Level 5 Sermsrap Building
169/98 Ratchadapisek Road
Din Daeng, Bangkok 10320
Thailand
Tel: +66 2 276 9504/5/6
Fax: +66 2 276 9503

UNITED KINGDOM

Textron Power Transmission Corporate HQ
Park Road
Lockwood, Huddersfield
West Yorkshire. HD4 5DD
Tel: +44 (0) 1484 465500
Fax: +44 (0) 1484 465501

David Brown Engineering Ltd
Park Road
Lockwood, Huddersfield
West Yorkshire. HD4 5DD
Sales
Tel: 0800 970 4001
Fax: 0800 970 4002
Service & Spare Parts
Tel: 0800 970 4003
Fax: 0800 970 4004

USA

Cone Drive Textron
240 East 12th Street
Traverse City
MI 49684
USA
Tel: +01 231 946 8410
Fax: +01 231 933 8600

David Brown Radicon
2040 Carboy Road
Mt Prospect
Illinois 60056
USA
Tel: +01 847 290 7500
Fax: +01 847 290 6510

AGRICULTURE

AUTOMOTIVE

CEMENT

CHEMICAL

CONSTRUCTION

DEFENCE

ENERGY

FOOD & BEVERAGE

FORESTRY

MARINE

METALS

MINING

PULP & PAPER

QUARRYING

RUBBER & PLASTICS

TEXTILES

TRANSPORTATION

WATER

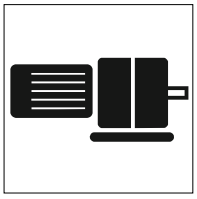
Geared motors

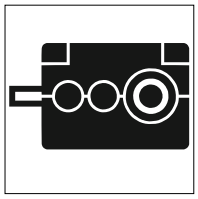
Industrial reducers

Worm

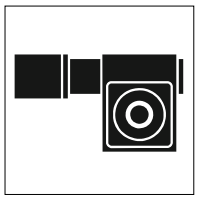
Precision products

Screwjacks

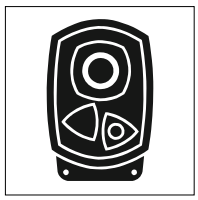
Shaftmount

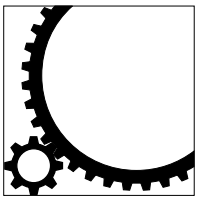
Horizontal mill drives

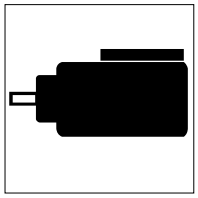
Vertical mill drives

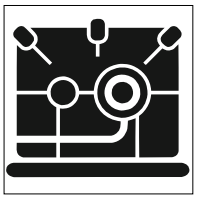
High speed

Planetary units

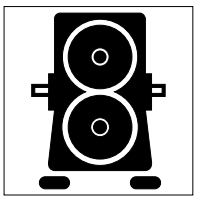
Specialist drives

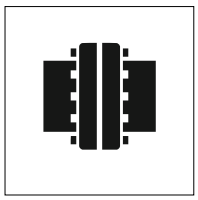
Couplings

Defence Systems

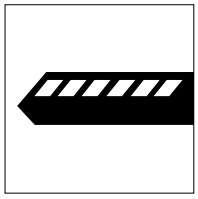
Rail

TEXTRON POWER TRANSMISSION

www.TextronPT.com